PHILIPS 28PW8206

MODEL

SERVICE MANUAL

Colour television

Chassis

EM2E

AA

Service
Service
Service

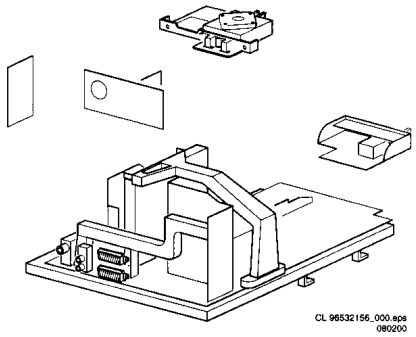

Service Manual

Contents		Page	
1	Technical specifications, connection facilities and chassis overview	2	
2	Safety instructions, maintenance, warnings and notes	4	
3	Directions for use	5	
4	Mechanical instructions	17	
5	Service modes, error codes, faultfinding and repair tips.	19	
6	*Block diagrams*		
	Block diagram (Supply, Deflection)	33	
	Block diagram (Video, Audio, Control)	34	
	Supply lines overview	35	
	Wiring diagram	36	
	I^2C overview	36	
	Survey of testpoints	37	
7	*Electrical Diagrams and PWB lay-outs*	*Diagram*	*PWB*
	Main supply (Diagram A1)	38	45-50
	Stand-by Supply (Diagram A2)	39	45-50
	Line deflection (Diagram A3)	40	45-50
	Frame deflection / rotation (Diagram A4)	41	45-50
	Audio amplifier (Diagram A5)	42	45-50
	Headphone amplifier (Diagram A6)	43	45-50
	Tuner, I/O, SIMM (female) (Diagram A7)	44	45-50
	Front (Diagram A8)	43	45-50
	SIMM (male) (Diagram B1)	51	57-66
	IF, I/O, Video processing (HIP) (Diagram B2)	52	57-66
	Featurebox (PICNIC) (Diagram B3)	53	57-66
	Video control & Geometry (HOP) (Diagram B4)	54	57-66
	Teletext & Control (OTC) (Diagram B5)	55	57-66
	Audio processing (Diagram B6)	56	57-66
	Mains switch panel (Diagram E)	67	67
	CRT panel (Diagram F)	68	67
	Side I/O panel (Diagram O)	69	69
	Top control (Diagram P)	70	70

Contents		Page
8	Electrical alignments	71
9	Circuit Descriptions	76
	List of abbreviations	92
10	Spare parts list	94

©Copyright reserved 2000 Philips Consumer Electronics B.V. Eindhoven, The Netherlands. All rights reserved. No part of this publication may be reproduced, stored in a retrieval system or transmitted, in any form or by any means, electronic, mechanical, photocopying, or otherwise without the prior permission of Philips.

Published by CO 0061 Service PaCE Printed in the Netherlands Subject to modification GB 3122 785 10310

PHILIPS

1. Technical specifications, connection facilities and chassis overview

1.1 Technical specifications

1.1.1 Reception

Tuning system	:	PLL
Reception	:	
TV systems off air	:	PAL B/G/I, SECAM B/G/L/L' for Western Europe
	:	PAL B/G, SECAM B/G/D/K, NTSC M for Eastern Europe
Sound systems	:	FM
	:	AM
	:	NICAM B/G/D/K/I
A/V connections	:	PAL B/G/D/K/I
	:	SECAM B/G/D/K/L/L'
	:	NTSC video playback
Channel selections	:	100 channels: VHF, UHF, S-Channels, Hyperband
Frequency range	:	44.25 - 855.25 MHz
Aerial input	:	Coaxial 75Ω
VCR preselections	:	0 and 90 - 99

1.1.2 Miscellaneous

Mains voltage	:	220V - 240V (± 10 %); 50 - 60Hz (± 5 %)
Ambient temperature	:	+5 to +45 deg. Celcius
Standby Power Consumption	:	< 1W

1.2 Connection facilities

1.2.1 Side I/O connections

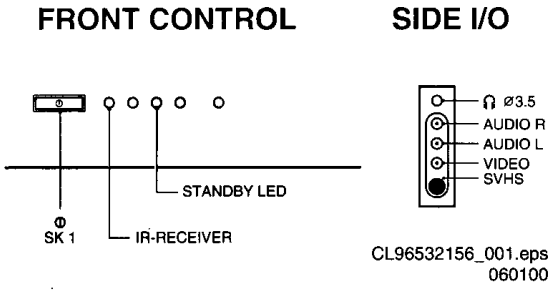

Figure 1-1

Audio / video

- - Video (CVBS)	$1V_{PP}$ / 75Ω	
- - Audio	L ($0.5V_{RMS}$ / 10kΩ)	
- - Audio	R ($0.5V_{RMS}$ / 10kΩ)	
- - Headphone	(32 - 2000Ω / 10mW)	

SVHS

1 -	GND	
2 -	GND	
3 - Y	($1V_{PP}$ / 75Ω)	
4 - C	($0.3V_{PP}$ / 75Ω)	

1.2.2 Rear connections

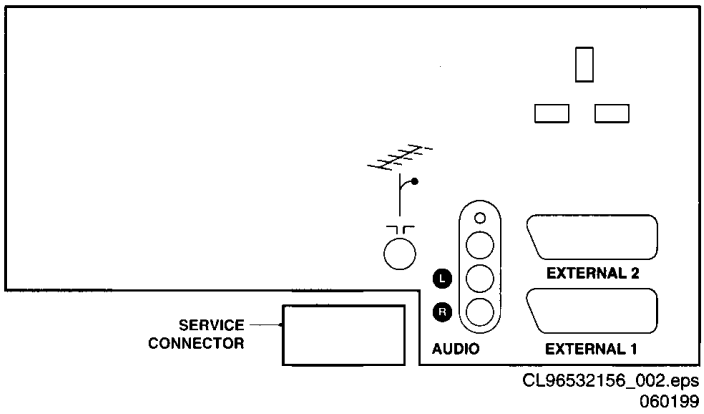

Figure 1-2

Audio

- - Audio	L ($0.5V_{RMS}$ / 10kΩ)	
- - Audio	R ($0.5V_{RMS}$ / 10kΩ)	

External 1 (in/out): RGB+CVBS

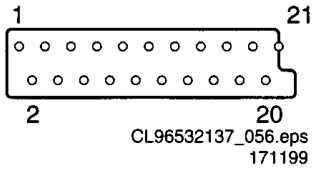

Figure 1-3

1 - Audio	R ($0.5V_{RMS}$ / 1kΩ)	
2 - Audio	R ($0.5V_{RMS}$ / 10kΩ)	
3 - Audio	L ($0.5V_{RMS}$ / 1kΩ)	
4 - Audio	GND	
5 - Blue	GND	
6 - Audio	L ($0.5V_{RMS}$ / 10kΩ)	
7 - Blue	($0.7V_{PP}$ / 75Ω)	
8 - CVBS-status	0 - 1.3V: INT, 4.5 - 7V: EXT 16:9, 9.5 - 12V: EXT 4:3	
9 - Green	GND	
10-		
11- Green	($0.7V_{PP}$ / 75Ω)	
12-		
13- Red	GND	
14- RGB-status	GND	
15- Red	($0.7V_{PP}$ / 75Ω)	
16- RGB-status	0 - 0.4V: INT 1 - 3V: EXT / 75Ω	
17- CVBS	GND	
18- CVBS	GND	
19- CVBS	($1V_{PP}$ / 75Ω)	
20- CVBS	($1V_{PP}$ / 75Ω)	
21- Earth	GND	

External 2 (in/out): SVHS+CVBS (intended for VCR)

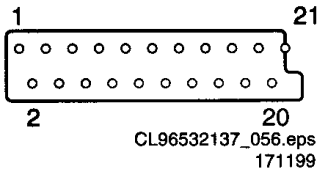

Figure 1-4

1 - Audio	R ($0.5V_{RMS}$ / 1kΩ)	
2 - Audio	R ($0.5V_{RMS}$ / 10kΩ)	
3 - Audio	L ($0.5V_{RMS}$ / 1kΩ)	
4 - Audio	GND	
5 -	GND	
6 - Audio	L ($0.5V_{RMS}$ / 10kΩ)	
7 -		
8 - CVBS-status	0 - 1.3V: INT, 4.5 - 7V: EXT 16:9, 9.5 - 12V: EXT 4:3	
9 -	GND	
10-	Easy link	
11-		
12-		
13- Red	GND	
14- RGB-status	GND	
15- C	($0.7V_{PP}$ / 75Ω)	
16-		
17- CVBS	GND	
18- CVBS	GND	
19- CVBS	($1V_{PP}$ / 75Ω)	
20- Y/CVBS	($1V_{PP}$ / 75Ω)	
21- Earth	GND	

1.3 Chassis overview

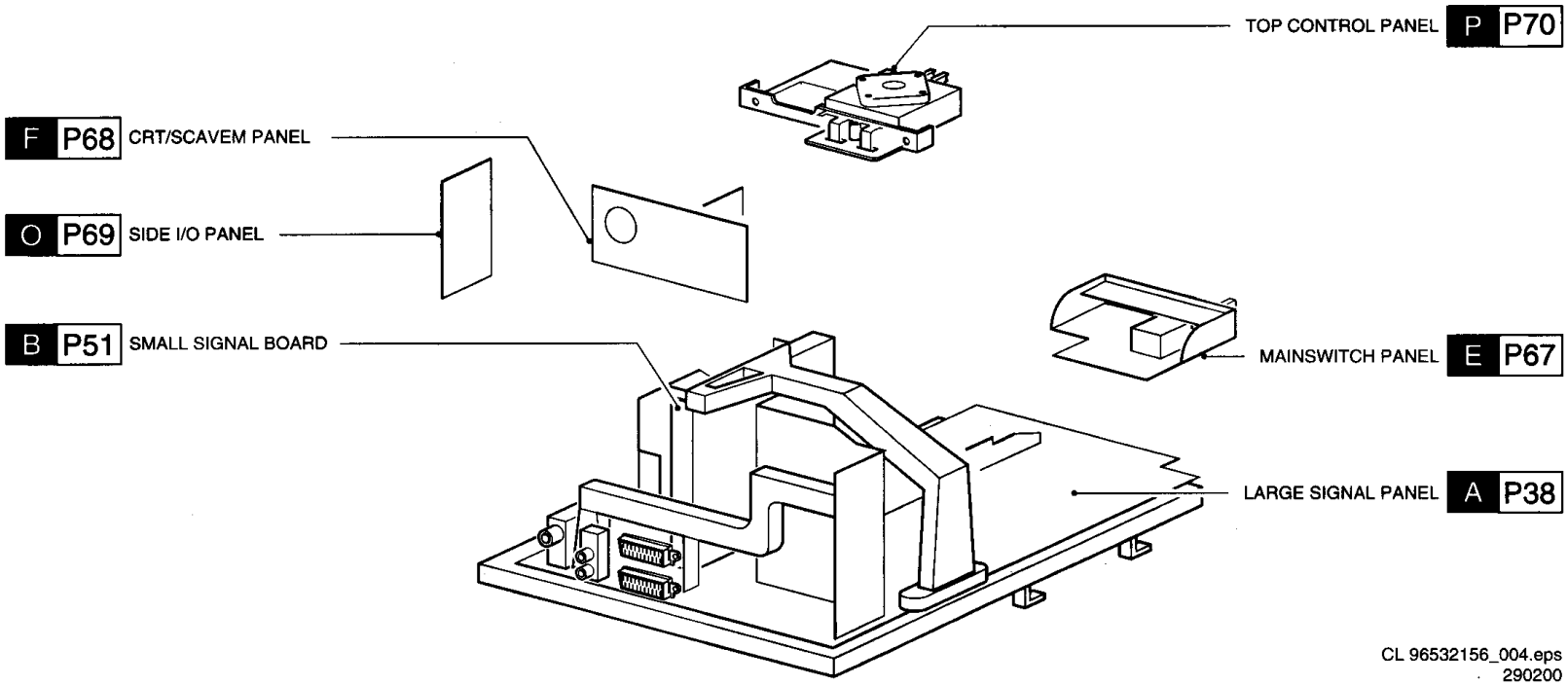

Figure 1-5

2. Safety & Maintenance instructions, Warnings and Notes

2.1 Safety instructions for repairs

Safety regulations require that during a repair:

- Due to the EM2E concept, a very large part of this chassis (incl. Hor. & Vert. deflection) is 'hot'. Therefore the set must be connected to the mains via an isolating transformer.
- Safety components, indicated by the symbol ⚠, should be replaced by components identical to the original ones.
- When replacing the CRT, safety goggles must be worn.

Safety regulations require that after a repair, the set must be returned in its original condition. In particular attention should be paid to the following points:

- General repair instruction: as a strict precaution, we advise you to resolder the solder joints, through which the horizontal deflection current is flowing, in particular:
  - All pins of the line output transformer (LOT);
  - Fly-back capacitor(s);
  - S-correction capacitor(s);
  - Line output transistor;
  - Pins of the connector with wires to the deflection coil;
  - Other components through which the deflection current flows.

Note: This resoldering is advised to prevent bad connections due to metal fatigue in solder joints and is therefore only necessary for television sets older than 2 years.

- The wire trees and EHT cable should be routed correctly and fixed with the mounted cable clamps.
- The insulation of the mains lead should be checked for external damage.
- The mains lead strain relief should be checked for its function in order to avoid touching the CRT, hot components or heat sinks.
- The electrical DC resistance between the mains plug and the secondary side should be checked (only for sets which have a mains isolated power supply). This check can be done as follows:
  - Unplug the mains cord and connect a wire between the two pins of the mains plug;
  - Set the mains switch to the 'ON' position (keep the mains cord unplugged!);
  - Measure the resistance value between the pins of the mains plug and the metal shielding of the tuner or the aerial connection on the set. The reading should be between 4.5 MΩ and 12 MΩ.
  - Switch off the TV and remove the wire between the two pins of the mains plug.
- The cabinet should be checked for defects to avoid touching of any inner parts by the customer.

2.2 Maintenance instructions

It is recommended to have a maintenance inspection carried out by a qualified service employee. The interval depends on the usage conditions:

- When the set is used under normal circumstances, for example in a living room, the recommended interval is 3 to 5 years.
- When the set is used in circumstances with higher dust, grease or moisture levels, for example in a kitchen, the recommended interval is 1 year.
- The maintenance inspection contains the following actions:
  - Execute the above-mentioned 'general repair instruction'.
  - Clean the power supply and deflection circuitry on the chassis.
  - Clean the picture tube panel and the neck of the picture tube.

2.3 Warnings

- In order to prevent damage to IC's and transistors, all high-voltage flashovers must be avoided. In order to prevent damage to the picture tube, the method shown in Fig. 2-1 should be used to discharge the picture tube. Use a high-voltage probe and a multimeter (position VDC). Discharge until the meter reading is 0 V (after approx. 30 s).
- ⚠ All IC's and many other semiconductors are susceptible to electrostatic discharges (ESD). Careless handling during repair can reduce life drastically. When repairing, make sure that you are connected with the same potential as the mass of the set by a wristband with resistance. Keep components and tools also at this same potential.
- Together with the deflection unit and any multipole unit, the used flat square picture tubes form an integrated unit. The deflection and the multipole units are set optimally at the factory. Adjustment of this unit during repair is therefore not recommended.
- Be careful during measurements in the high-voltage section and on the picture tube.
- Never replace modules or other components while the unit is switched ON.
- When making settings, use plastic rather than metal tools. This will prevent any short circuits and the danger of a circuit becoming unstable.
- Wear safety goggles during replacement of the picture tube.

2.4 Notes

- The direct voltages and oscillograms should be measured with regard to the tuner earth (⏚) or hot earth (⏚).
- The direct voltages and oscillograms shown in the diagrams are indicative and should be measured in the Service Default Mode (see chapter 5) with a colour bar signal and stereo sound (L: 3 kHz, R: 1 kHz unless stated otherwise) and picture carrier at 475.25 MHz.
- Where necessary, the oscillograms and direct voltages are measured with (⊤) and without (⊥) aerial signal. Voltages in the power supply section are measured both for normal operation (◐) and in Standby (⏻). These values are indicated by means of the appropriate symbols.
- The picture tube PWB has printed spark gaps. Each spark gap is connected between an electrode of the picture tube and the Aquadag coating.
- The semiconductors indicated in the circuit diagram and in the parts lists are completely interchangeable per position with the semiconductors in the unit, irrespective of the type indication on these semiconductors.
- Manufactured under license from Dolby Laboratories Licensing Corporation. DOLBY, the double D symbol and PRO LOGIC are trademarks of Dolby Laboratories Licensing Corporation.

DOLBY SURROUND
PRO • LOGIC

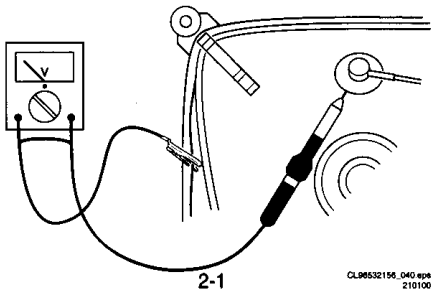

2-1

Contents

Installation

Your remote control *2*
Preparation *3*
Installation *4*
Store TV channels *4*
Select the menu language and country *4*
Automatic installation *5*
Manual installation *5*
Give name *6*
Reshuffle the programme list *6*
Select favourite TV channels *6*
Install TV setup *7*

Operation

Use of the remote control *8-9*
Use of the menus
Picture menu *10*
Sound menu *10*
Features menu *11*
NEXTVIEW *12-15*
Teletext *16-18*

The keys on top of the TV *18*

Connect peripheral equipment

Connecting and selecting equipment *19-22*
Remote control functions for peripherals *22-23*
Recording *24*

Tips *25*
Index *25*
Glossary *26*

EasyLink features are based on the "one touch operation" approach. This means that a sequence of actions are executed at the same time in both the television and the video cassette recorder, ***provided both are fitted with the EasyLink function*** *and connected with the eurocable supplied with your video recorder.*

English

Preparation

Your remote control

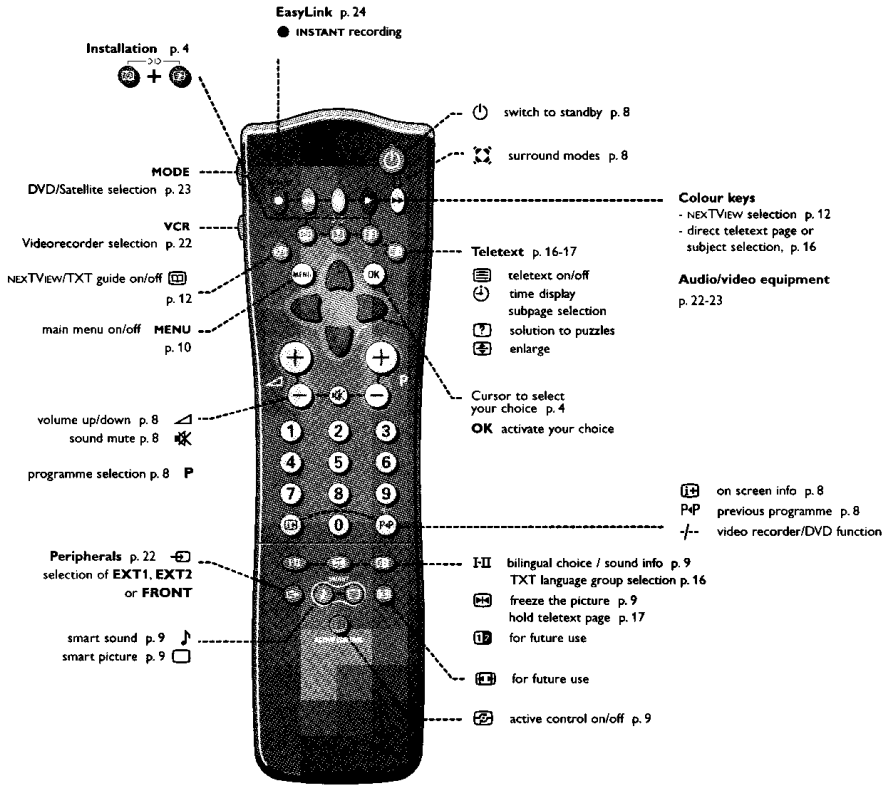

Preparation

1. **Place the TV on a solid surface.**
For ventilation, leave at least 5 cm free all around the TV.
Do not place the TV on a carpet.
To prevent any unsafe situations, do not place any objects on top of the TV.
Avoid heat, direct sunlight and exposure to rain or water.

2. **Insert the aerial plug** firmly into the aerial socket ⊤ at the back of the TV.

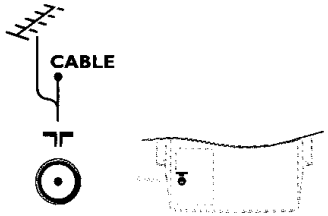

3. Insert the mains plug in the wall socket having a mains voltage of 220V-240V.
To prevent damaging the mains (AC) cord which could cause a fire or electric shock, do not place the TV on the cord.

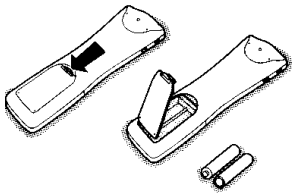

4. Remote control: Remove the cover of the battery compartment.
Insert the 2 batteries supplied (Type R6-1.5V).

The batteries supplied do not contain the heavy metals mercury and cadmium. Nevertheless in many countries exhausted batteries may not be disposed of with your household waste. Please check on how to dispose of exhausted batteries according to local regulations.

Note: this remote control functions with TVs which use the RC6 signalling standard.

5. **Switch the TV on :** Press the power switch ⏻ on the front of your TV.
A red indicator on the front of the TV lights up and the screen comes on.
If the TV is in standby mode (see p. 8), press the **- P+** key on the remote control.
When you switch on your set ***for the first time****, the menu* **LANGUAGE** *automatically appears on the screen. The explanation appears in different languages one at a time. Choose your own language and press the* **OK** *key on the remote control.*

Go on to page 4, Store TV channels.

Installation

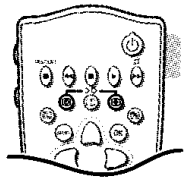

Select the INSTALLATION menu

Press ⏻ and ⊕ at the same time.

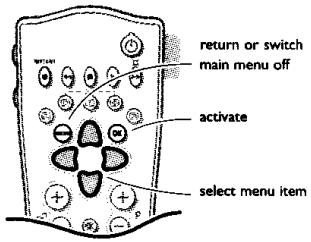

To use the menus

1. Use the cursor in the up/down, left/right directions to select a menu item.
2. Press the **OK** key to activate.
3. Use the **MENU** key to return or to switch the menu off.

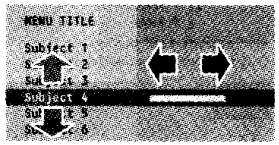

Store TV channels

After the new or extra TV channels have been stored, the TV automatically transfers those TV channels to the video recorder if it is equipped with the EasyLink function. The message ***EasyLink : downloading .....*** *appears on the screen. The programme list of the video recorder is now the same as the one of the TV. If the TV is connected to a video recorder which supports the NEXTVIEWLink function, the TV also automatically transfers the language and country selections to the video recorder.*

Select the menu language and country

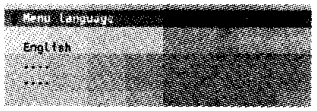

First, select your language and country.

1. Select **Menu language** and press the **OK** key.
2. Select your language and press the **OK** key.
Use the cursor up/down to scroll through the list and to bring up other languages which are not displayed on the screen at present.
3. Select **Country** and press the **OK** key.
4. Select the country where you are now located and press the **OK** key.
Use the cursor up/down to scroll through the list and bring up other countries which are not displayed on the screen at present.

Select **Other** when none of the countries applies.

You can now search for and store the TV channels in two different ways:
using **automatic installation** or **manual installation** (tuning-in channel by channel).
Select your choice and press the **OK** key.

Automatic installation

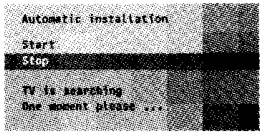

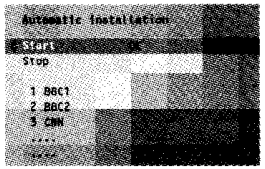

In the Automatic installation menu select **Start** and press the **OK** key to activate the searching. All TV channels are searched for and stored automatically.

If a cable system which broadcasts ACI (Automatic Channel Installation) or a TV channel transmitting a teletext page with the frequencies and programme names of all the TV channels which can be received, is detected, the search is stopped and a programme list appears.
The programme list is automatically filled with all the programme numbers and names of the TV channels transmitted.

It is possible that the cable company or the TV channel displays a broadcast selection menu. Layout and items are defined by the cable company or the TV channel. Make your choice with the cursor and press the **OK** *key.*

To exit from the menu press the **MENU** key on the remote control.

Go on to page 6.

Manual installation

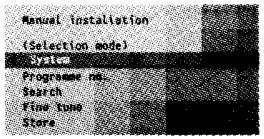

Searching for and storing TV channels is done channel by channel.
You must go through every step of the Manual installation menu.

Selection mode is only present and lights up if the country selected also offers the channel option (C-channels for aerial channels, S-channels for cable channels).
You can choose either channel or frequency mode.

1. Select the TV system
   Select the country or part of the world from where you want to receive the TV channel.
   If you are connected to a cable system, select your country or part of the world where you are now located.
2. Press the cursor down and enter the programme number with the digit keys.
3. Search for a TV channel
   Press the cursor left/right.
   The frequency or the channel number increases until a TV channel is found.

   Direct selection of a TV channel
   If you know the frequency, the C- or S-channel number, enter it directly with the digit keys 0 to 9.
   Ask for a list from your cable company or dealer, alternatively consult the Table of frequencies on the inside backcover of this handbook.
4. Fine tune
   In case of poor reception, you can improve the reception by adjusting the frequency with the cursor left/right.
5. To store your TV channel, select **Store** and press the **OK** key.

   Repeat steps 1 to 5 to store another TV channel.
6. To exit from the menu press the **MENU** key on the remote control.

Give name

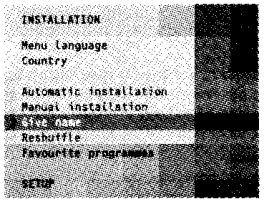

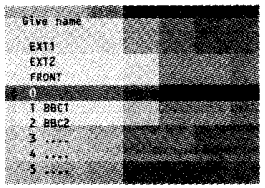

It is possible to change the name stored in the memory or to assign a name to a TV channel which has not yet been entered. A name with up to 5 letters or numbers can be given to the programme numbers 0 to 99. For example SUPER, BBC1,... Between 99 and 0 you can also name any peripherals that are connected to a euroconnector.

1. Select **Give name** in the **INSTALLATION** menu and press the **OK** key.
2. Select the programme number.
3. Press the **OK** key.
4. Select the character with the cursor up/down.
5. Select the following position with the cursor right.
6. Select the following character.
7. Press the **OK** key when finished.
8. Press the **MENU** key to return to the **INSTALLATION** menu.

Space, numbers and other special characters are located between Z and A.

Reshuffle the programme list

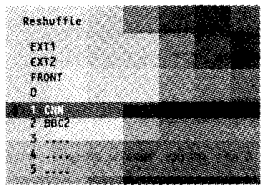

According to your preference you **can** change the order of the stored TV channels.

1. Select **Reshuffle** in the **INSTALLATION** menu and press the **OK** key.
2. Select the programme number you want to exchange.
3. Press the **OK** key.
4. Select the new number you want to exchange it with.
5. Press the **OK** key.
   Repeat the operation until all TV channels are allocated as you like.
6. Press the **MENU** key to return to the **INSTALLATION** menu.

Select Favourite TV channels

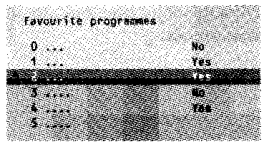

After leaving the installation you can browse through the TV channels by pressing the **- P +** key. Only those TV channels which are in the favourite list will be displayed. Non-favourite TV channels can still be selected with the digit keys. By default all stored channels are added to the favourite list.

1. Select **Favourite programmes** in the **INSTALLATION** menu and press the **OK** key.
2. Select your favourite programme number.
3. Select **Yes** or **No** with the cursor left/right.
4. Repeat for every TV channel you want to make a favourite or a non-favourite TV channel.
5. Press the **MENU** key to return to the **INSTALLATION** menu.

In order for NEXTVIEW *to function properly, the first TV channel from the favourite list should also broadcast the correct local date and time via teletext.*

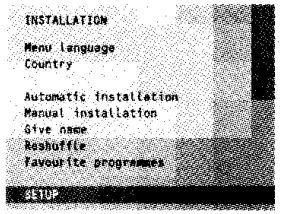

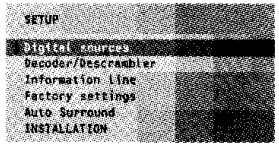

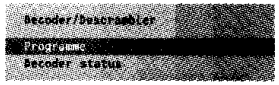

Install TV Setup

The Setup menu allows you to adjust initial settings, i.e. those which are not related to the installation of the TV channels.
The Setup menu contains items that control the settings of the TV's functions, features, services and peripherals you may have connected.

1. Use the cursor in the up/down, left/right directions to select the menu item.
2. Use the **OK** key to activate.
3. Use the **MENU** key to return or switch menu off.

Digital sources
See Connect Peripheral Equipment, p. 20 to connect your digital equipment, like a DVD, a digital satellite tuner or a similar digital device.

Define Decoder/Descrambler programme numbers
If a decoder or a descrambler is connected, see p. 19 you can define one or more programme numbers as decoder programme numbers.

Press the cursor left/right to select the input used to connect to your decoder **Off**, **EXT1** or **EXT2**.
Select **Off** if you do not want the selected programme number being activated as a decoder programme number.

easy LINK

Select **EXT2** *when the decoder is connected to your EasyLink video recorder. When selecting the decoder, the message* ***EasyLink: downloading presets....*** *appears on the screen.*

Information line
Select **On** and after the selection of a TV programme or after pressing the [i+] key on the remote control, a TV channel which broadcasts teletext may transmit the name of the TV channel, the programme name or another message. This is displayed on screen next to information about sound.
When selected **Off**, only sound information is displayed after the selection of a TV channel or after pressing the [i+] key.

Factory settings
Select **Factory settings** and press the **OK** key to restore picture and sound settings, predefined in the factory.

Auto Surround
Sometimes the broadcaster transmits special signals for Surround Sound encoded programmes. In that case, the TV automatically switches to the best Surround Sound mode when Auto Surround is switched on. Virtual Dolby will be reproduced, see p. 8.
Overruling this surround mode remains possible.

Installation
Select **Installation** and press the **OK** key to return immediately to the **INSTALLATION** menu.

4. To exit from the menu press the **MENU** key repeatedly.

Operation

Use of the remote control

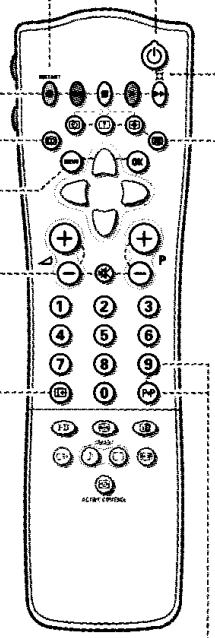

● Instant record
If your video recorder has the EasyLink function the **INSTANT** ● key for record can be operated in the TV mode.

● ◀◀ ■ ▶ ▶▶ Video recorder see p. 22

NEXTVIEW/TXT guide on/off see p. 12

MENU Main menu on/off see p. 10

OK Press this key to activate your choice, when in the menus.

Volume
Press + or - to adjust the volume.

Mute
Temporarily interrupt the sound or restore it.

P Programme selection
To browse through the TV channels activated in the Favourite Programme menu.

[i+] Screen information
Press for 5 seconds to activate/de-activate the extended or reduced display of TV channel and programme information on the screen.
Press briefly to display information about the selected TV channel and programme, the sound reception, picture settings and the remaining time set with the sleeptimer.

Standby
The set is switched off.
To switch the TV on again, press - **P +** or the digit keys.
If your EasyLink video recorder has the system standby function and you press the standby key for 3 seconds, both the TV and video recorder are switched to standby.
Your TV consumes energy in the standby mode. Energy consumption contributes to air and water pollution. We advise to switch off your TV overnight instead of leaving it on standby. You save energy.

Surround modes
Incredible Surround
- In **MONO** sound mode, this feature, when switched on, enables you to hear a spatial effect of sound.
- In **STEREO** sound mode, when **Incredible Surround** is selected, it seems as though the loudspeakers are spread further apart from one another.

Virtual Dolby *(optimal with Dolby Surround signals)*
Virtual Dolby enables you to experience the effect of Dolby Surround Pro Logic, reproducing a rear sound effect

Teletext on/off see p. 16

Teletext functions see p. 17

Time display
The time, downloaded from the TV channel (with teletext) stored on programme number 1 or the lowest favourite programme number, is displayed on the screen.
This function is not available when continuous subtitles have been switched on.

0/9 Digit keys
To select a TV channel.
For a two digit programme number, enter the second digit within 2 seconds.
To switch immediately to a selected one digit TV channel, keep the digit key pressed a bit longer.

P◂P Previous programme
The previously selected TV channel is displayed.
The -/-- indication is only video recorder/DVD.

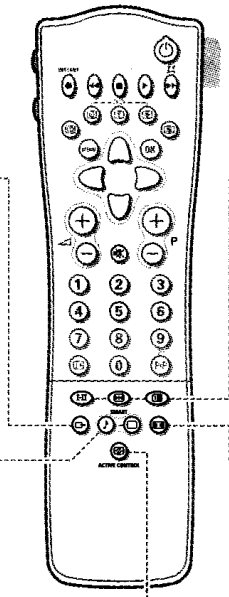

Select peripherals
Press this key repeatedly to select **EXT1**, **EXT2** or **FRONT**, according to where you connected the peripherals (p. 22).

I-II Bilingual choice and sound mode selection
Press this key
- to switch from **Stereo** to **Mono** sound, in case of stereo transmission, or from **Nicam Stereo** to **Nicam available**, in case of digital transmission;
- to choose between language I (Dual I) or language II (Dual II), in case of bilingual transmission. The setting is separately stored for each TV channel.

Freeze
To activate/de-activate the frozen picture or to hold a teletext page.

for future use

Smart Keys
To select predefined picture and sound settings.

Smart Sound
Each time it is pressed, a different sound setting is selected, corresponding with specific factory setting of the equalizer.

Smart Picture
Each time it is pressed, a different picture setting is selected, corresponding with specific factory settings of Contrast, Colour, Sharpness and Dynamic Contrast.

Personal refers to the personal preference settings of picture and sound selected in the picture and sound menu.
Remark: the moment you are in a predefined smart sound or picture setting and you modify a setting in the picture or sound menu, all values of the menu will overwrite the previously made settings.

for future use

Active control
Active control is a pro-active and automatic system. The TV continuously measures and corrects all incoming signals in order to provide the best picture possible.
Press the key to select the Active Control values Off or On.
Off Sharpness and Dynamic Contrast are controlled automatically
On Sharpness, Dynamic Contrast and Noise Reduction are controlled automatically.
Press the cursor in the up/down directions while the selected Active Control setting information is on top of the screen.
The Active Control menu appears.
The picture settings are being adapted continuously and automatically.
The menu items cannot be selected.
Press the cursor in the up/down directions again to switch off the menu.

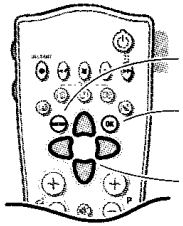

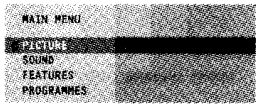

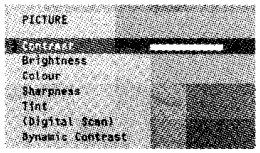

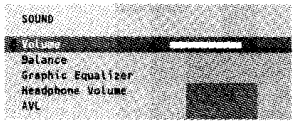

Use of the menus

1. Press the **MENU** key to display/cancel the **MAIN MENU**.
2. Use the cursor in the up/down directions to select the **PICTURE**, **SOUND** or **FEATURES** menu or to select the **PROGRAMMES**.
3. Press the cursor right to activate the selected menu.
4. Use the cursor in the up/down, left/right directions to select the menu item.
5. Use the **OK** key to activate.
6. Press the **MENU** key repeatedly to return or to switch the menu off.

Picture menu

If an NTSC peripheral is connected to one of the euroconnectors, the option Hue also appears.

Tint
Select the colour temperature: **Normal**, **Warm** or **Cool**.

Digital Scan (Line Flicker Reduction) *(if provided)*
In certain circumstances while watching TV programmes it may be preferable to switch off the digital scan line flicker reduction.
Press the cursor left/right to select **On** of **Off**.

Dynamic Contrast
To make the contrast in the darker and the brighter picture areas more noticeable, select the **Med** setting.
In certain circumstances it may be preferred to select **Min**, **Max** or **Off**.

The modified adjustments for Contrast, Brightness, Colour, Sharpness, Tint, (Digital Scan) and Dynamic Contrast are automatically stored for all TV channels.
Select **Factory settings** in the Setup menu to restore the predefined factory settings, see p. 7.

Sound menu

The modified adjustments for Volume, Balance, Treble and Bass are automatically stored for all TV channels.
Select **Factory settings** in the Setup menu to restore the predefined factory settings, see p. 7.

Graphic Equalizer
Here you can select the preferred sound setting which corresponds with the personal sound settings.

Headphone volume
See Connect Peripheral Equipment, p. 21, for the connection of the headphone.

AVL (Automatic Volume Leveller)
AVL automatically controls the volume level to avoid too large level differences, especially when switching to another programme or during commercial breaks.

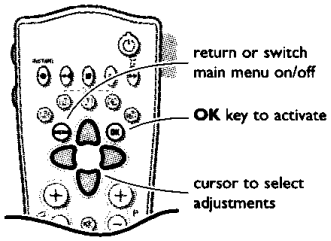

Features menu

1. Press the **MENU** key to display/cancel the **MAIN MENU**.
2. Use the cursor in the up/down directions to select the **FEATURES** menu.
3. Press the cursor right to activate the selected menu.
4. Use the cursor in the up/down directions to select a menu item.
5. Use the cursor in the left/right directions to select the desired setting.

Sleeptimer

With the sleeptimer you can set a time period after which the TV should switch itself to standby.
The counter runs from **Off** up to **180 min.**
One minute before the TV is set to go to standby, the remaining seconds appear on screen. You can always switch off your set earlier or change the set time.

Child lock

If the child lock is on, the TV can only be switched on with the remote control. The **P** - and + keys on top of the TV cannot be used to select a TV channel. In this way you can prevent unauthorised use of your TV.
If the message **Child lock On** appears, the child lock must be switched off before you can use the **P** - and + keys on top of the TV to select a TV channel.

Subtitle

TV channels with teletext often transmit certain programmes with subtitling. See Teletext, Continuous Subtitles, p. 18 how to select the proper subtitle page from the teletext index.
Select **Subtitle On** or **Off**.

Press the **MENU** key to switch off the Features menu.

Programme list

1. Press the **MENU** key to display/cancel the **MAIN MENU**.
2. Select **PROGRAMMES** with the cursor up/down.
3. Press the cursor right to display an overview of all the TV channels installed.
4. Press the cursor up/down to run through the list and press **OK** to select the desired TV channel.
5. Press the **MENU** key to switch off the Programme list.

NEXTVIEW / Teletext Guide

Today, most broadcasters in Europe, are offering teletext pages containing their programme schedule of today. These pages can be requested by switching the TV to **Teletext Guide**.
An increasing number of broadcasters are offering an extended programme guide service called **NEXTVIEW.** NEXTVIEW is a new way of presenting programme schedules and offers more features than common teletext. With NEXTVIEW it is possible to show for instance all the movies coming tonight.

Both facilities are integrated in this TV: NEXTVIEW and Teletext Programme Guide. If a TV channel supports NEXTVIEW then the TV will automatically present the NEXTVIEW programme schedule. If the TV channel supports just teletext, then the TV will switch automatically to Teletext Guide.
Both facilities are offering the same functions: record, remind and info. However in case of Teletext Guide the broadcaster is responsible if these functions are possible.
You can search for the programmes you want to watch up to 7 days in advance. It is also possible to search for a programme by theme, e.g. sport, movie, etc. Once a programme has been selected it can be tagged, to remind you, or to record on the video recorder automatically (provided the video recorder is equipped with NEXTVIEWLink, level 2.0), once, daily, weekly or series. Teletext Guide/NEXTVIEW also allows direct access to detailed information about programmes if provided by the broadcaster.

The broadcaster is responsible for the contents of the information.
The TV is responsible for the capture of that information and for the presentation to the user.

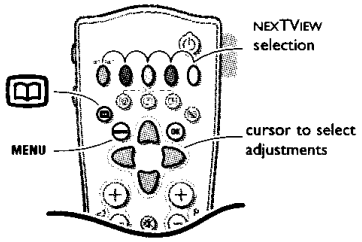

Use of the Teletext Guide/NEXTVIEW menus

1. Press the [book] key on the remote control to display/cancel the Teletext Guide/ NEXTVIEW menu.
2. Use the cursor in the up/down, left/right directions to select the date, **CHANNEL** for the channel guide, **THEME** for the theme guide, **OVERVIEW** for an overview of all the programmes which are marked as reminders or for recording, the programme guide page number or to enter the programme list.

Teletext Guide

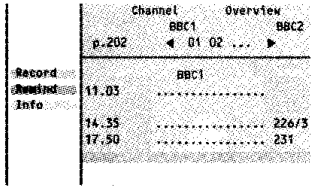

3. Enter the proper programme guide page number with the digit keys or with the – **P** + keys.
4. Press the cursor left/right to run through the subpages.
5. Select a programme with the cursor up/down.
6. Press one of the colour keys to select one of the basic functions (if available); **record, remind, info.** See Basic functions further on.
7. Press the **OK** key to return to the header area again.

NEXTVIEW

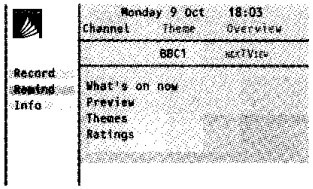

3. Select a programme with the cursor up/down.
4. Press one of the colour keys to select one of the basic functions (if available); **record, remind, info.** See Basic functions further on.
5. Press the **OK** key to return to the header area again.

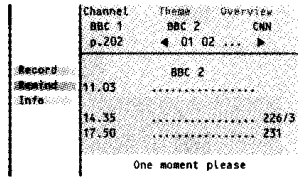

Teletext guide

TV channels which broadcast teletext also transmit a page with the programme guide of the day. For each selected TV channel the programme guide page can be selected with the [TT] key:

- automatically if the selected TV channel supports services like PDC (Programme Delivery Control) or MIP (Magazine Inventory Page).
- if automatic pre-selection is not possible then the index page is displayed and the proper programme guide page number of the selected TV channel has to be entered with the digit keys.

The programme guide page will be stored automatically only if it satisfies Video Programming via Teletext (VPT) requirements.

Every time you press the [TT] key, the programme guide page of the selected TV channel will be available if the TV channel does not support NEXTVIEW.

The function items record, remind and info, corresponding with the coloured keys, become highlighted if the displayed programme page satisfies the Video Programming via Teletext (VPT) requirements. Select a programme item and press one of the function keys, e.g. Record or Remind. See Basic functions further on.
The Info item is enabled if the selected programme contains a page number with an optional subcode referring to a page with more info about the programme.

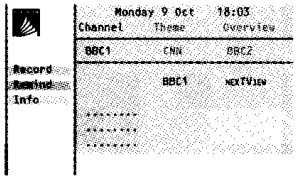

NEXTVIEW modes to sort and represent information

Channel

The Channel guide provides an overview of all programmes that are broadcast by a single channel during one day.
Already passed programmes can be made visible via cursor up.
The list will start with the earliest broadcast programme.
With cursor left/right another favourite TV channel can be selected.

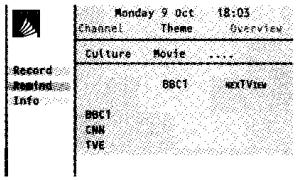

Theme

The theme guide displays a list of all programmes at the selected date, that matches with the selected category (news, sport, culture, movies, ...).
The default starting item will be the current or next programme on the current TV channel.
The **THEME** selection is only present if programmes in the TV guide have defined themes.

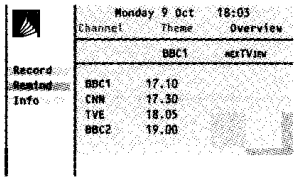

Overview

The Overview menu provides a list of programmes that are marked as reminders or to be recorded each day.
When more than one programme to be recorded has an overlap in time, these programmes will be marked by a red colour.

After the programme has been broadcast, all items set for once will be deleted from the list the following day. This menu can be used to change a reminder or recorder.

Note: the TV will automatically interpret the broadcast time (as shown on the teletext guide) of your selected programme into the correct local time and date.

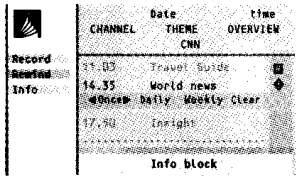

Basic functions

The functions Record, Remind and Info can be activated with the corresponding colour keys on the remote control.
If the function is not available, then the text is shown at reduced brightness.
Select a programme with the cursor up/down.

Record [R] or Remind ◆

1. Press the red colour key to activate **Record** or the green colour key to activate **Remind.**
   If the programme number of the broadcaster is not yet known, a message appears with the request to input the correct programme number with the cursor left/right and press OK.
   A small menu pops up in which you can choose the interval: once, daily or weekly, or clear an earlier made record or remind setting. The default interval is set to **Once**. If a programme is an episode of a series, it is identified by the system and the options **daily** and **weekly** are replaced by the option **series**. In this case the system identifies when the next episode of the series will be broadcast. This is not possible in the Teletext guide.
2. Use the cursor in the left/right directions to select the interval.
   The colour of the tag refers to the interval.
3. Press the **OK** key.

When **Record** [R] is activated:
Storing is displayed to indicate the video recorder is programmed.
When **Remind** ◆ is activated:
- a message will be displayed the moment the tagged programme with ◆ starts, when watching the TV later on.
- the TV switches on the moment the tagged programme with ◆ starts, when the TV is in standby.

Note: Recordings and reminders are not possible when the broadcaster does not transmit dates and times of the programmes.
*The message **No TV programming possible** appears.*
Make sure you are on the TV programming page.

Info

1. Press the yellow colour key to activate **Info.**
   Advertisements or information relating to the selected programme are displayed. In some cases all of the information does not fit on the screen. Use the cursor up/down to browse through all the information.
2. Press the yellow colour key again to switch off the information.

Acquisition and updating of NEXTVIEW information

Acquisition and updating of NEXTVIEW is done when you are watching a TV channel supporting NEXTVIEW.

Video recorder restrictions with NEXTVIEW

The **Record** item and the automatic recording will only be present and possible if your video recorder is equipped with NEXTVIEWLink.
Your video recorder should be connected to **EXTERNAL 2**. See Connect Peripheral Equipment, p. 19.

The daily, weekly and series options, the number of recordings set and the way overlapping recordings are managed, depend on the type of video recorder you have. When all video recorder timers are full, the item **Record** in the menu will not be present.

Upload video recorder overview *(only with Philips sets)*
When the TV is switched on, the timer recordings are uploaded to the TV to check if any manual addition or deletions have been done. This is shown in the overview.
The video recorder manages and removes timer recordings when performed.

Some NEXTVIEWLink video recorders do not allow a daily programming of the recording to start on a Saturday or Sunday. In this case the item **daily** will be removed from the menu on those days.

Teletext

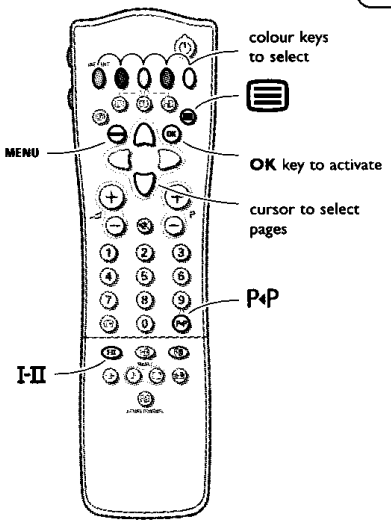

Most TV channels broadcast information via teletext.
Each channel which broadcasts teletext transmits a page with information on how to use its teletext system. Look for the teletext page with the main index (usually p. 100).
Depending on the TV channel, teletext is transmitted in different systems.
The colours used in the options line correspond with the colour keys of your remote control.

About Easy Text

Easy Text considerably reduces the waiting time (on condition that the teletext broadcast of the particular TV channel is received for at least half a minute) by :

- a direct selection of previous and following pages which are in transmission and of the pages referred to in the options line
- a habit watcher list: frequently used pages are put automatically in a list of preferred pages, so that they are immediately available
- the precapturing of the page numbers referred to in the displayed page
- the precapturing of all the subpages.

Switch Teletext on and off

Press ▤ to switch the teletext on or off.
The main index page appears on the screen together with two information lines at the top and one option line at the bottom of the screen.

Remark: if the displayed teletext characters on screen do not correspond with the characters used in your language, press the **I-II** *key repeatedly to select Language group 1 or 2.*

Select a Teletext page

With the digit keys
Enter the desired page number with the digit keys.
The page counter seeks the page or the page appears immediately when the page number has been stored in the memory.
A message appears when you have entered a non existent or incorrect page number. Page numbers beginning with 0 or 9 do not exist. Choose another number.

With the option line
Select with the colour keys, corresponding to the coloured options at the bottom of the screen, the desired subject.

Quickly run through the teletext pages

Press the cursor up/down or the **- P +** key to run through the previous or the following pages.

Select the previously selected txt page

Press the P◂P key.

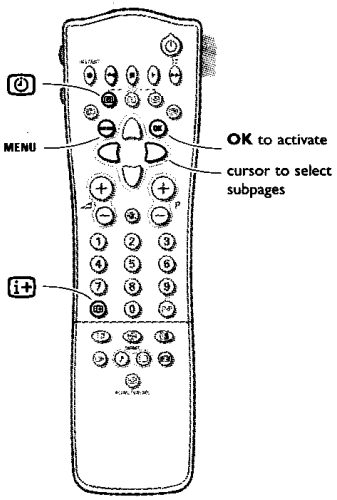

Select the index teletext page

Press the white colour key to display the main index (usually p.100).

Only for T.O.P teletext broadcasts :
T.O.P orders the pages in categories and adds other possibilities of enhancing ease of use.
Press [i+]. A T.O.P. overview of the teletext subjects available is displayed.
Not all TV channels broadcast T.O.P. teletext. When the teletext system is not T.O.P. teletext, a message appears at the top of the screen.
Select with the cursor up/down, left/right the desired subject and press the **OK** key.

Select subpages

When a selected teletext page consists of different subpages, one of the subpages appears on the screen.
The coloured number in the first information line refers to the displayed subpage.
The other subpages can be selected in 2 ways :

With the cursor left/right
The other subpage numbers appear in white as soon as the transmission has found them. They are stored in the memory so that they are available while the teletext page is on screen.
Select with the cursor left/right the previous or the following subpage.

With the [0] key
• Enter the subpage number yourself:
Press [0]. Enter the desired subpage with the digit keys : e.g. 3 for the third page of seven subpages.
The TV searches for the selected subpage.

• Automatically rotating subpages:
Press [0] again to cancel the entered digit key for the subpage.
Now the subpages rotate automatically.

Press [0] again to select the subpages with the cursor left/right again.

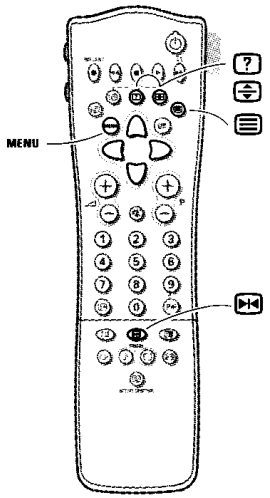

Special teletext functions

Hold
Press [▶◀] to stop the automatically rotating of the subpages or to stop the page counter from seeking when you have entered a wrong page number or when the page is not available.
Enter another page number.

Enlarge
Press [⊕] repeatedly to display the upper part, the lower part and then to return to the normal page size. When the upper part is displayed, you can scroll the text, line by line using the cursor up/down.

Reveal
Press [?] to reveal/conceal the hidden information, such as solutions to riddles and puzzles.

Select Continuous Subtitles

TV channels with teletext often transmit programmes with subtitling. For each TV channel you can store a subtitle page which will be displayed continuously if the programme being broadcast is transmitted with subtitles.

Switch on teletext and select the proper subtitle page from the index.
Switch off teletext.
Now the subtitle page is stored for the selected TV channel.

Once subtitles have been stored and **Subtitle On** has been selected they will automatically be displayed on the selected TV channel if subtitles are in the transmission.
Select **Subtitle On** or **Off** in the Features menu, see p. 11.
The subtitle symbol [▭] appears when **Subtitle On** is selected.

Remark: you are in teletext mode, so only teletext functions are available.

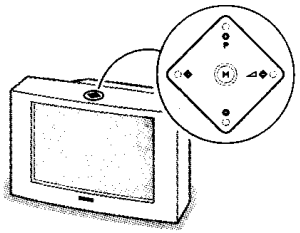

Keys on top of the TV

Should your remote control be lost or broken you can still change some of the basic picture settings with the keys on top of the TV.

Press the **M** key repeatedly to select **Volume, Brightness, Colour, Contrast.**
Press the **P** - or + keys to carry out the selected adjustment.
When the menu adjustment is not displayed, the **P-** or **+** keys enable you to select the TV channels, the ◿ - or + keys to adjust the volume.

The selected adjustment automatically switches off when no action has been executed for 10 seconds.

Connect Peripheral Equipment

There is a wide range of audio and video equipment that can be connected to your TV. The following connection diagrams show you how to connect them.

Video recorder

Connect the aerial cables ①, ② and, to obtain the optimum picture quality, eurocable ③ as shown opposite.

easy LINK

If your video recorder is provided with the EasyLink function, the eurocable supplied with it should be connected to **EXTERNAL 2** *to benefit from the EasyLink functionality.*

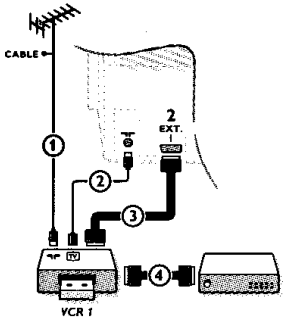

If the eurocable ③ is not used the following steps are required:

Search for and store the test signal of the video recorder

1. Unplug the aerial cable ① from the aerial socket ⊤ of your video recorder.
2. Switch on your TV and put the video recorder on the test signal. (See the handbook for your video recorder.)
3. Search for the test signal of your video recorder in the same way as you searched for and stored the TV signals. See Installation, Searching for and storing TV channels, Manual installation, p. 5.
4. Store the test signal under programme number 0 or between 90 and 99.
5. Replace the aerial cable in the aerial socket ⊤ of your video recorder after you have stored the test signal.

Decoder and video recorder
Connect a eurocable ④ to your decoder and to the special euroconnector of your video recorder. See also the video recorder handbook.
See Define Decoder/Descrambler prog. numbers, p. 7.
You can also connect your decoder directly to **EXTERNAL 1** or **2** with a eurocable.

Video recorder and other peripherals (except Digital Sources)

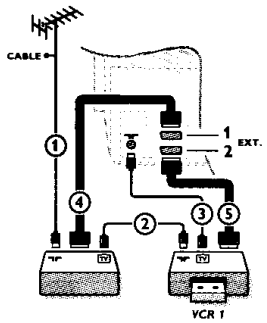

1. Connect the aerial cables ①, ② and ③ as shown opposite. Better picture quality can be obtained if you also connect eurocable ⑤ to **EXTERNAL 2** and a eurocable ④ to **EXTERNAL 1**.
2. Look for the test signal of your peripheral in the same way as you do for a video recorder.

When a video recorder is connected to **EXTERNAL 1** *you can only record a programme from your TV.*
Only when a video recorder is connected to **EXTERNAL 2** *it is possible to record a programme from your TV as well as from other connected equipment. See Record with your video recorder, p. 24.*

Note: EXTERNAL 1 can handle CVBS and RGB, EXTERNAL 2 CVBS and Y/C.

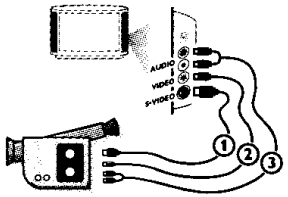

Camera & camcorder

1. Connect your camera or camcorder to sockets at the right side of your TV.
2. Connect the equipment to **VIDEO** ② and **AUDIO L** ③ for mono equipment.

   Press the I-II key repeatedly to select the sound coming from one or both loudspeakers of your TV.
3. For stereo equipment also connect **AUDIO R** ③.

S-VHS quality with an S-VHS camcorder is obtained by connecting the S-VHS cables with the **S-VIDEO** input ① and **AUDIO** inputs ③.

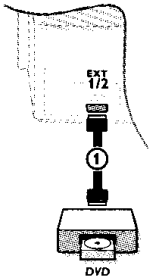

Digital equipment (DVD, digital satellite tuner,...)

Connect your digital equipment with a eurocable ① to one of the euroconnectors (**EXT1** or **EXT2**), or with a cinch cable to the **VIDEO** input at the right side of the TV (see illustration above).

1. Press ⊙ and ⊕ at the same time.

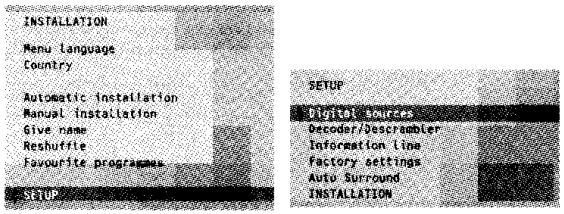

2. Select **Digital sources** in the Setup menu of the **INSTALLATION** menu and select:
   - **None** if you have no digital source connected,
   - **EXT1** or **EXT2** if you have connected your equipment to a euroconnector,
   - **FRONT** in case you have connected your equipment to the right side of the TV.
3. Press the **MENU** key to switch off all menus.

Note: the low quality of some digital picture material may be the cause of digital image distortion. In this case select **Eco** *under the* **SMART PICTURE** ☐ *key on the remote control as this setting is intended to improve distorted picture quality.*

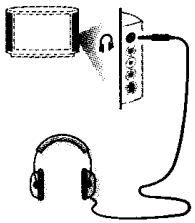

Headphone

1. Insert the plug into the headphone socket 🎧 at the right side of the TV.
2. Press 🔇 on the remote control to switch off the internal loudspeakers of the TV.
   The headphone impedance must be between 8 and 4000 Ohm.
   The headphone socket has a 3.5 mm jack.

In the **SOUND** menu select **Headphone volume** to adjust the headphone volume, see p. 10.

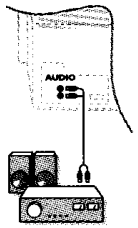

Audio equipment / Amplifier

Connect the audio cables to the audio input of your audio equipment and to **AUDIO L** and **R** at the back of your TV.

You can listen to your TV sound via your audio equipment.

If you want to connect more equipment to your TV, consult your dealer.

To select connected equipment

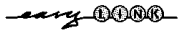

If the TV is connected to a video recorder with the EasyLink function, in some cases the TV will be switched on, even when it was in standby. (E.g. playback tape,...)
This is not possible when Child lock On is selected.

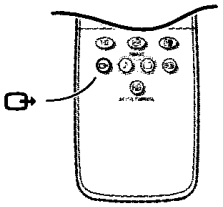

Equipment connected with an aerial cable only :
Select the programme number under which you have stored the test signal with the digit keys.

Equipment connected to a euroconnector or to the right side of the TV
Press the ⊡→ key repeatedly to select **EXT1**, **EXT2** or **FRONT**, according to where you connected your equipment at the back or the right side of your TV.
Remark : Most equipment (decoder, video recorder, satellite receiver) carries out the switching itself.

If you want to change to TV channels?
Enter the programme number of the TV channel which you want to watch with the digit keys or press the ⊡→ key repeatedly to select **TV**.

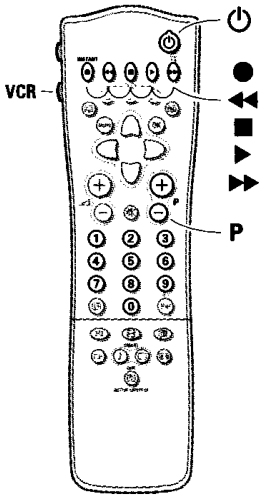

Audio and video equipment keys

Most of the audio and video equipment from our range of products can be operated with the remote control of your TV.

Video recorder
Keep the **VCR** key on the left side of the remote control pressed and simultaneously press:

●	for record,
◀◀	for rewind,
■	for stop,
▶	for play,
▶▶	for fast forward,
-/--	for selecting 1- or 2-digit programme numbers from the video recorder,
- P +	for sequential programme selection from the video recorder tuner,
0 to 9	to select a programme number from your video recorder tuner,
⏻	to switch the video recorder to standby

These keys function with equipment which use the RC5 signalling standard.

If your video recorder has the EasyLink function, the key **INSTANT** ● *for recording, can be operated in the TV mode.*
If your EasyLink video recorder has the system standby function, when you press the ⏻ key for 3 seconds, both TV and the video recorder are switched to standby.

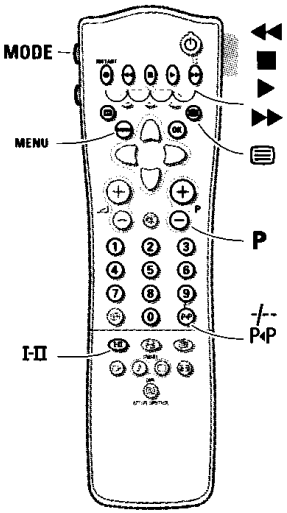

Satellite receiver

Press the **OK** key simultaneously with the digit key 1.
Now you can operate your satellite receiver with the remote control of your TV.

Keep the **MODE** key on the left side of the remote control pressed and simultaneously press:

MENU to switch the **SAT** menu on or off
-/-- to select a one or two digit programme number from the satellite receiver.

These keys function with equipment which use the RC5 signalling standard.

DVD player

Press the **OK** simultaneously with the digit key 2.
Now you can operate your DVD player with the remote control of your TV.

Keep the **MODE** key on the left side of the remote control pressed and simultaneously press:

MENU to switch the DVD menu on or off
to select a DVD title
P◂P to select a DVD chapter
I-II to select your choice of audio language
◀◀ to search down
■ stop
▶ play
▶▶ to search forward
0-9 to select a programme number from your DVD
OK to enter the selected menu item

●, ⏻, ?, ⊞, ⇨ have no function

Note: after replacing the batteries the default operational equipment is the satellite receiver.

These keys function with equipment which use the RC6 signalling standard.

Record with your video recorder

To record S-VHS quality, connect an S-VHS peripheral directly to the video recorder.

Record a TV programme

1. Select the programme number on your video recorder.
2. Set your video recorder to record.
   See the handbook for your video recorder.

Switching programme numbers on your TV does not disturb recording !

Record a programme on your video recorder connected to EXTERNAL 2 from Audio/Video equipment connected to EXTERNAL 1 or to sockets on the right side of the TV

1. Switch on the equipment.
2. Select the right external on your video recorder.
3. Set your video recorder to record.
   You record what you are watching on the screen.

Do not switch programme numbers or do not switch off your TV when you are recording !

Record with your video recorder with EasyLink

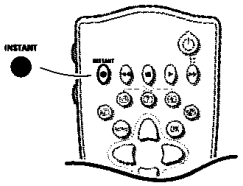

If you have connected an S-VHS video recorder provided with the EasyLink function, you can record S-VHS-quality from an S-VHS peripheral connected to the right side of the TV. (E.g. from an S-VHS camcorder.)

In TV mode, it is possible to start a direct recording of the programme which is being displayed on the TV screen.
Press the **INSTANT** ● *record key of the remote control.*
The video recorder switches on from standby and a message of what is being recorded appears on the screen.
The video recorder starts recording the programme you are watching.
Switching programme numbers on your TV does not disturb recording !

When recording a programme from a peripheral connected to EXTERNAL 1 or FRONT, you can not select another TV programme on the screen.
To watch TV programmes again, press the programme number you want to select twice.
Attention: the recording is stopped and your video recorder switches to standby.

Record with your video recorder with NEXTVIEWLink

If your video recorder is equipped with NEXTVIEWLink, and you tagged one or more programmes to be recorded automatically in the NEXTVIEW mode, it is not necessary for the TV to be in the standby mode or switched on for the recording to start.

4. Mechanical instructions

4.1 Accessing the service connector (for ComPair)

1. Remove the 'Service Connector' cover, see Figure 4.1.
2. Connect the ComPair cable (for more info see chapter 5).
3. Start ComPair and perform the diagnosis.

4.2 Removing the Rear Cover

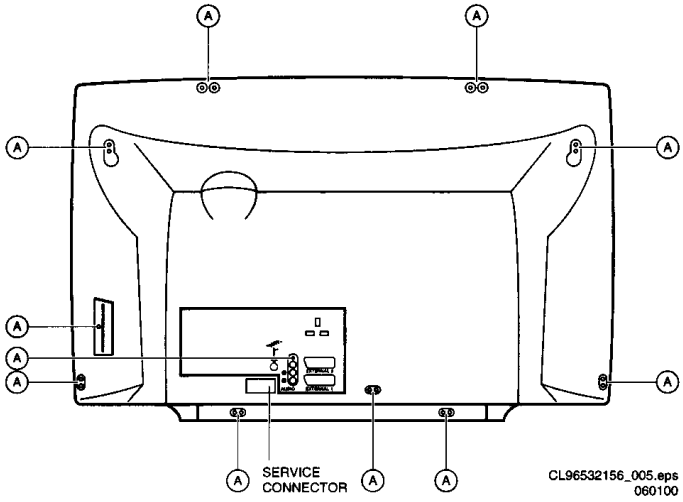

Figure 4-1

1. Remove the fixation screws (A) of the rear cover, notice also the screw for the side-I/O.
2. Now the rear cover can be removed.

4.3 Service position

The following PWB's are present in this chassis (see also 'Chassis overview', chapter 1):
1. Large Signal Panel (LSP)
2. Small Signal Board (SSB)
3. Top Control panel
4. CRT panel (or PTP)
5. Side I/O panel
6. Mains Switch/LED panel

4.3.1 Service position LSP

Position 1: For better accessibility of the LSP, do the following (figure 4.2):

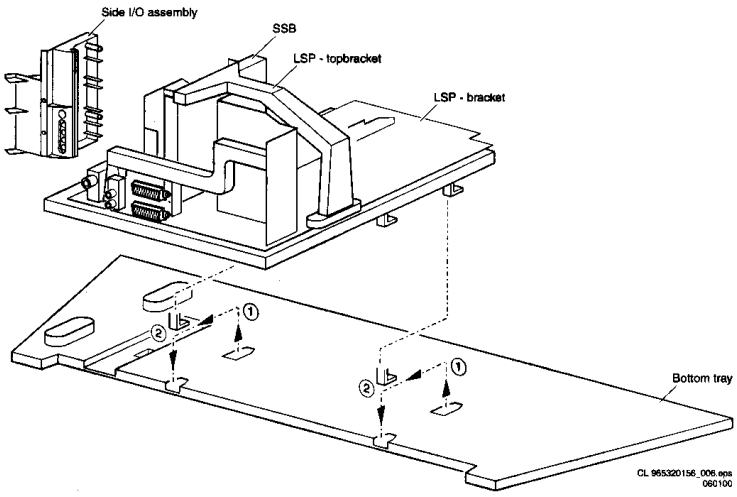

Figure 4-2

1. Remove the LSP-bracket from the bottom tray by pulling it backwards.
2. Hook the bracket in the first row of fixation holes of the bottom tray. In other words reposition the bracket from (1) to (2).

Position 2: To get access to the bottom side (solder side) of the LSP, do the following (figure 4.3):

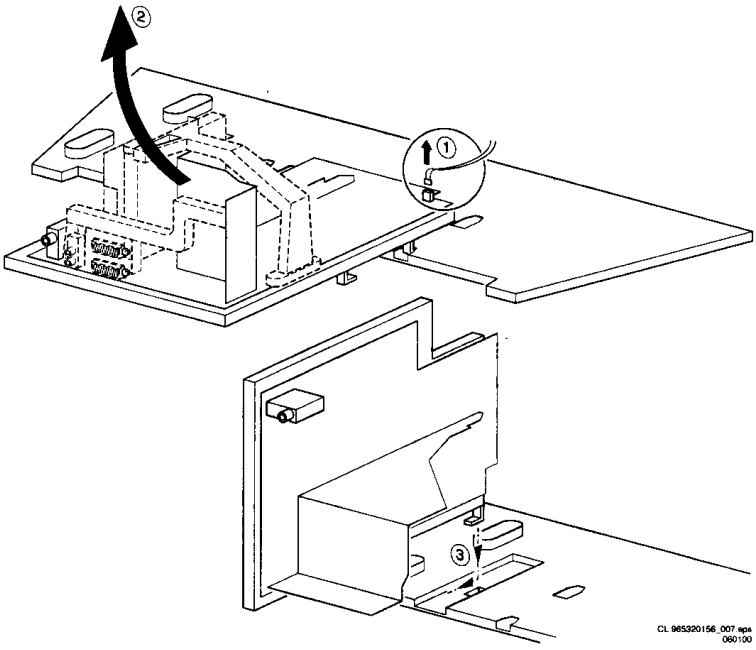

Figure 4-3

1. Disconnect the degaussing coil from the LSP by removing the cable on connector 0020 (1).
2. Release the wiring from the heatsink fixation clamps, in order to get room for repositioning the LSP.
3. Turn the LSP 90 degrees clockwise (2) and place it in the fixation hole at the left side of the bottom tray (3).

4.3.2 Service position SSB

In fact there is no predefined service position for the bottom (B-) side of the SSB. All relevant test points are located on the A-side (side that is facing the Tuner).
If IC's must be replaced: take the complete panel out of the SIMM-connector.
To get access to the SSB test points, do the following:

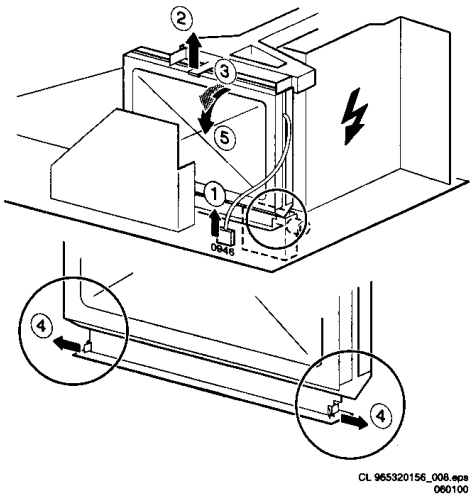

Figure 4-4

1. Put the LSP in service position 1 (as described above).
2. Disconnect the IF-cable from connector 0946 (1).
3. Release the 'top fixation clamp' which holds the SSB (2) and pull the SSB slightly towards the Tuner (3). At the same time, the 2 metal clamps at both sides of the SIMM-connector must be released (4) and the complete SSB can be taken out now by pulling the top-side of the SSB towards the Tuner (5). It 'hinges' in the SIM-connector.

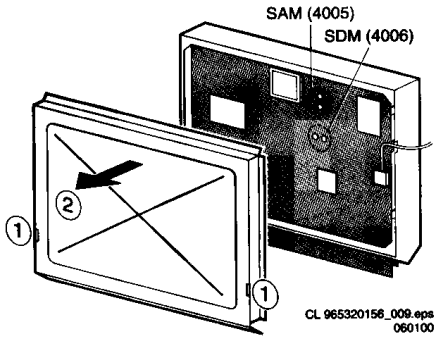

Figure 4-5

1. Once the SSB has been taken out of the connector, the A-side shielding can be removed.
2. After removal of the shielding, the panel can be replaced in its connector in reverse order. Don't forget to reconnect the IF-cable.
3. If necessary for the measurement, the LSP can be put in 'service position 2' (as described above).

4.3.3 Accessing the Top Control panel

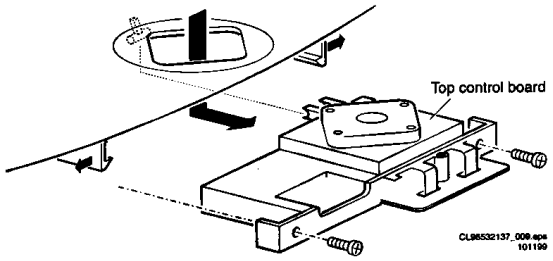

Figure 4-6

1. Remove the two screws.
2. Pull the board backward.

4.3.4 Accessing the Side I/O panel

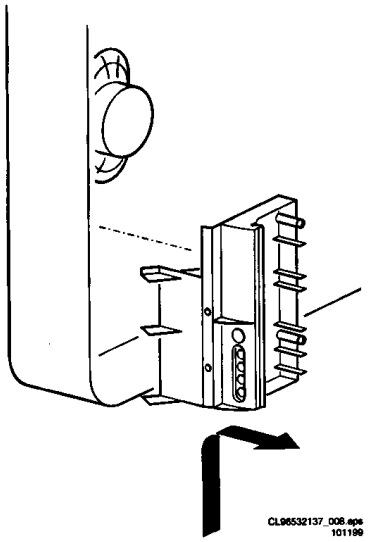

Figure 4-7

1. The complete Side I/O-assembly can be lifted out of the hinge for servicing.
2. The board can easily be removed out of the bracket by releasing the fixation clamps.

4.3.5 Accessing the Mains Switch/LED panel

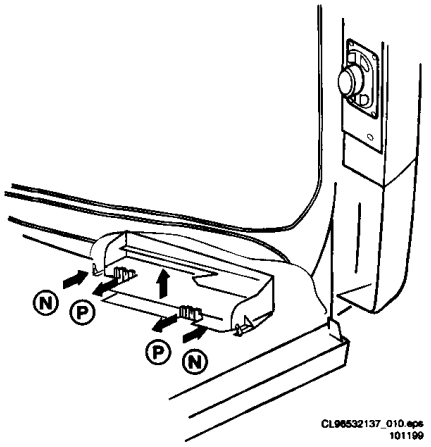

Figure 4-8

1. Release the two fixation clamps (N) by pushing them upward.
2. At the same time, the complete assy must be pulled backward (P).
3. If necessary, the light guide can be replaced now.
4. The 'Mains Switch/LED'-panel can be removed now by releasing the clamps of the bracket.

4.4 Mounting the Rear Cover

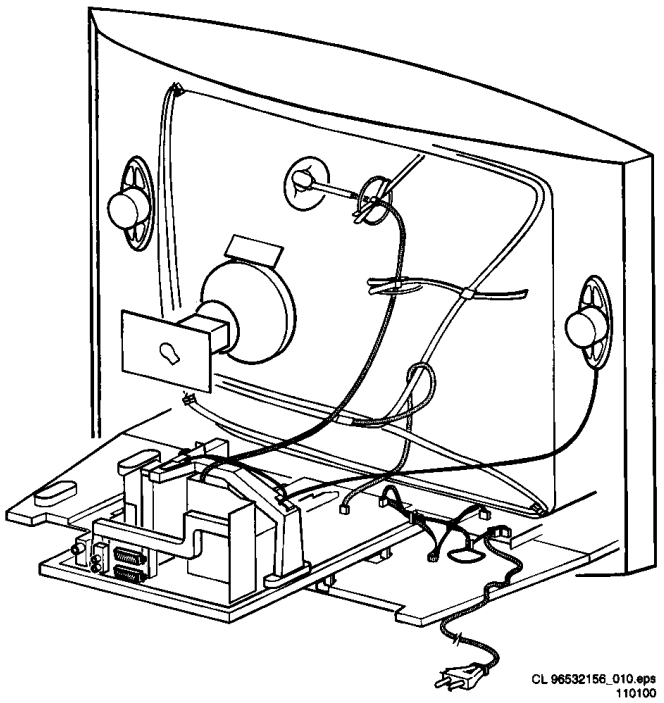

Figure 4-9

Before mounting the Rear Cover, some checks has to be performed:

- Check whether the Mains Cord is mounted correctly in the guiding brackets.
- Check whether all cables are replaced in their original position. This is very important due to the large 'hot' area of the set. Special attention must be paid to the right Loudspeaker cable and the degaussing cable.

5. Service modes, error codes, protections, faultfinding and repair tips

In this chapter the following paragraphs are included:
1. Test points.
2. Service modes.
3. Problems and solving tips (related to CSM).
4. ComPair.
5. Error codes.
6. Protections.
7. Repair tips.

5.1 Test points

The EM2E chassis is equipped with test points in the service printing. These test points are referring to the functional blocks:
- P1-P2-P3, etc. on LSP: Test points for the power supply.
- L1-L2-L3, etc. on LSP: Test points for the line drive and line output circuitry.
- F1-F2-F3, etc. on LSP: Test points for the frame output circuitry.
- R1-R2 on LSP: Test points for the rotation circuitry.
- A1-A2-A3, etc.: Test points for the audio circuitry.
- I1-I2-I3, etc. on SSB:Test points for the Tuner/IF part.
- S1-S2-S3, etc. on SSB: Test points for the synchronisation circuitry.
- V1-V2-V3, etc. on SSB: Test points for the video processing circuitry.
- C1-C2-C3, etc. on SSB: Test points for the control and teletext circuitry.
- F1F-F2F-F3F, etc.: Test points for the CRT-panel circuitry.
- SC1-SC2-SC3, etc: Test points for the SCAVEM circuitry.

The numbering is done in a for diagnostics logical sequence; always start diagnosing within a functional block in the sequence of the relevant test points for that functional block.

5.2 Service modes and ComPair

5.2.1 Service Default Mode (SDM)

The purpose of the SDM is to provide a situation with predefined settings to get the same measurement results as given in this manual.

Specification of the SDM:
- Tuning frequency 475.25 MHz.
- TV-system for BGLM sets set to BG.
- All picture settings at 50 % (brightness, colour, contrast, hue).
- All sound settings at 50 % except volume at 25 % (so bass, treble, balance at 50 %, volume at 25 %).
- All service-unfriendly modes are disabled (like sleep timer, child lock, blue mute, AVL and SDLP).

Entering the SDM can be done in 4 ways:
- Via a standard RC-handset by entering the code '062596' followed by the 'MENU' button (it is possible that, together with the SDM, the main menu will appear. To switch it off, push the 'MENU' button again).
- Via ComPair.
- By the 'DEFAULT' button on the DST while the set is in the normal operation mode.
- By short-circuiting for a moment the two solder-pads with the indication 'SDM' (item 4006) on the A-side of the SSB (activation can be performed in all modes except when the set has a problem with the main-processor).

Note: If the SDM is entered via the pins, all the software-controlled protections are de-activated.

Exiting the SDM can only be done via the STANDBY command. By switching off-on the set with the mains switch the set will come up again in the SDM.

5.2.2 Service Alignment Mode (SAM)

The purpose of the SAM is to align the set and/or adjust the settings.

Specification of the SAM:
- Software alignments (see chapter 8).
- Option settings (see chapter 8).
- Error buffer reading and erasing. The most recent error code is displayed on the left side.
- Operation counter.
- Software version.

Entering the SAM can be done in 4 ways:
- Via a standard RC-handset by entering the code '062596' followed by the 'OSD' button [i +] (it is possible that, due to the button sequence, the channel will change to channel 9. To return to the channel of your selection, push the appropriate button on the RC).
- Via ComPair.
- By the 'ALIGN' button on the DST while the set is in the normal operation mode (or SDM). Enter the password '3140' and press OK.
- By short-circuiting for a moment the two solder-pads with the indication 'SAM' (item 4005) on the A-side of the SSB (activation can be performed in all modes except when the set has a problem with the main-processor).

Note: If the SAM is entered via the pins, all the software controlled protections are de-activated.

The Service Alignment Mode menu will now appear on the screen. The following information is displayed:
- Date: the software date.
- ID: the software version of the ROM (Example: EM2E11.0_01501. This software-code stands for EM2E (chassis), E = Europe, 1 = language, 1.0 = software version, xxxxx = latest 5 digits of 12nc code software).
- Operation Hours: the accumulated total of operation hours.
- Errors: followed by maximal 10 errors. The most recent error is displayed at the upper left. For explanation errors see (table 5.1).
- Defect. Module: here the module that generates the error is displayed. If there are multiple errors in the buffer that have not all been generated by a single module, there is probably another defect. The message 'Unknown' will then be displayed here.
- Reset Error Buffer: pressing the 'OK' key can reset the error buffer.
- Functional Test: all devices are tested via the 'OK' key. Eventual errors are displayed in the error buffer. The error buffer is not erased, the content returns when the Functional Test is terminated.
- Alignments: this enables the Alignments sub-menu to be called up.
- Dealer Options: extra features for dealers.

Exiting the SAM can be done via the 'MENU' command or via switching OFF-ON the set with the mains switch.

5.2.3 Customer Service Mode (CSM)

All EM2E sets are equipped with the 'Customer Service Mode' (CSM). This 'Customer Service Mode' is a special service

mode, which can be activated and deactivated by the customer upon request of the service technician/dealer during a telephone conversation in order to identify the status of the set. This CSM is a 'read only' mode, therefore modifications in this mode are not possible.

Switching-on of the Customer Service Mode:
The Customer Service Mode will switch-on after pressing simultaneously the 'MUTE' knob on the remote control handset and the 'MENU' button on the TV for at least 4 seconds. This activation only works if there is no menu on the screen.

Switching-off the Customer Service Mode:
The Customer Service Mode will switch-off after pressing any key of the remote control handset (with exception of the 'cursor-up' and 'cursor-down' keys), or the buttons on the TV or by switching off the TV set with the mains switch.

Detailed explanation of the Customer Service Mode
After switching on the Customer Service Menu the following screen will appear:

```
CUSTOMER SERVICE MENU 1

 1  SW Version        ............
 2  Code 1             ... ... ... ... ...
 3  Code 2             ... ... ... ... ...
 4  LS Volume          ..
 5  LS Brightness      ..
 6  LS Contrast        ..
 7  LS Colour          ..
 8  LS Headphone       ..
 9  Sharpness          .
10  Dolby             .....
11  Surround mode     ............
11a Tuner Frequency   ............

                ▼
```

CL96532137_024.eps
101199

Figure 5-1

Note: Following text is an explanation of the CSM. Be aware that these descriptions are depending on the set hardware.

Line 1:
Software version; the build in software version (AAABCX.Y)
- AAA = chassis name (EM1 = Painter processor, EM2 = OTC processor)
- B = country (E = Europe, A = Asian Pacific, U = USA)
- C = 1 (language cluster)
- X = main version number
- Y = sub version number

Details on the software version can be found in the chapter 'Software Survey' of the publication 'Product Survey - Colour Television'.

Line 2:
Code 1; gives the last 5 errors of the error buffer. As soon as the built-in diagnose software has detected an error the buffer is adapted.

Line 3:
Code 2; gives the first 5 errors of the error buffer. As soon as the built-in diagnose software has detected an error the buffer is adapted.
The last occurred error is displayed on the leftmost position of code 2. Each error code is displayed as a 3 digit number. When less than 10 errors occur, the rest of the line(s) is (are) empty. In case of no errors the text 'No Errors' is displayed. See paragraph 5.5 of this chapter for a description of the error codes.

Line 4:
LS Volume; gives the Last Status of the volume as set by the customer for this selected transmitter. The value can vary from 0 (volume is minimum) to 24 (volume is maximum). Volume values can be changed via the volume key on the remote control handset.

Line 5:
LS Brightness; gives the Last Status of the brightness as set by the customer for this selected transmitter. The value can vary from 0 (brightness is minimum) to 63 (brightness is maximum). Brightness values can be changed via the 'cursor left' and 'cursor right' keys on the remote control handset after pressing the 'MENU' button and selecting 'PICTURE' and 'Brightness'.

Line 6:
LS Contrast; gives the Last Status of the contrast as set by the customer. The value can vary from 0 (contrast is minimum) to 63 (contrast is maximum). Contrast values can be changed via 'cursor left' and 'cursor right' keys on the remote control handset after pressing the 'MENU' button and selecting 'PICTURE' and 'Contrast'.

Line 7:
LS Colour; gives the Last Status of the colour saturation, as set by the customer. The value can vary from 0 (colour is minimum) to 63 (colour is maximum). Colour values can be changed via 'cursor left' and 'cursor right' keys on the remote control handset after pressing the 'MENU' button and selecting 'PICTURE' and 'Colour'.

Line 8:
LS Headphone; gives the Last Status of the headphone volume, as set by the customer. The value can vary from 0 (volume is minimum) to 24 (volume is maximum). Headphone volume values can be changed via the 'cursor left' and 'cursor right' keys on the remote control handset after pressing the 'MENU' button and selecting 'SOUND' and 'Headphone'.

Line 9:
Sharpness; gives the sharpness value. The value can vary from 0 (sharpness is minimum) to 7 (sharpness is maximum). In case of bad antenna signals a too high value of the sharpness can result in a noisy picture. Sharpness values can be changed via the 'cursor left' and 'cursor right' keys on the remote control handset after pressing the 'MENU' button and selecting 'PICTURE' and 'Sharpness'.

Line 10:
Dolby; indicates whether the received transmitter transmits Dolby sound (present) or not (not present). Attention: The presence of Dolby can only be tested by the software on the Dolby Signalling bit. If a Dolby transmission is therefore received without a Dolby Signalling bit, then this indicator will show 'not present' even though such a Dolby transmission is received.

Line 11:
Surround Mode; indicates the by the customer selected surround mode. In case the set is a Non-Dolby set there will be displayed '0'. If it is a Dolby-set then is displayed: 'Pro Logic', 'Dolby 3 Stereo', 'Hall' or 'Off'. For Dolby-set surround mode can be changed via the 'cursor left' and 'cursor right' keys on the remote control handset after pressing the 'MENU' button and selecting 'SOUND' and 'Surround settings'.

Line 11a:
Tuner Frequency; indicates the frequency the selected transmitter is tuned to. The tuner frequency can be changed via the "cursor left" and "cursor right" keys for fine tune or by entering directly with the digit keys 0 to 9 on the remote control

handset after opening the installation menu and selecting "manual installation".
The installation menu can be opened by pressing "timer" and "enlarge" at the same time.

By means of the 'cursor-down' knob on the remote control handset the Customer Service Menu 2 will appear. By means of the 'cursor-up' knob on the remote control handset the Customer Service Menu 1 will appear again.
Customer Service Menu 2 represents following information:

```
▲
CUSTOMER SERVICE MENU 2

13 Centre Volume      .
14 DNR               ...
15 Noise Figure       .
16
17 Colour System     .....
18 TV System         .....
19 Audio System      .....
20 Tuned bit         .....
21 Speaker config.   ............
22 Digital Sources   ............
23
24
```

CL96532156_036.eps
210100

Figure 5-2

Line 13:
Centre Volume; gives the volume value of the centre loudspeakers. This value can vary from 0 (minimum volume) to 63 (maximum volume). Centre volume can be changed via the 'cursor left' and 'cursor right' keys on the remote control handset after pressing the 'MENU' button and selecting 'SOUND', 'Dolby Pro Logic' and 'Centre volume'. This feature is only available when surround mode is in 'Dolby Pro Logic' or 'Dolby 3 Stereo'.

Line 14:
DNR; gives the setting of the DNR for the selected transmitter. The following selections are possible:
'off', 'min', 'med' or 'max'. The DNR is changed automatically when 'Active Control' is 'ON'.

Line 15:
Noise Figure; gives the noise ratio for the selected transmitter. This value can vary from 0 (good signal) to 127 (average signal) and to 255 (bad signal).

Line 16:
Digital Option; gives the selected digital mode, '100 Hz' or 'Digital Scan'. Digital option can be changed via the 'cursor left' and 'cursor right' keys on the remote control handset, after pressing the "MENU' button and selecting 'PICTURE', 'Digital Options'.

Line 17:
Colour System; gives information about the colour system of the selected transmitter.
- Black and white: No colour carrier received
- PAL: PAL signal received
- SECAM: SECAM signal received
- NTSC: NTSC signal received

Line 18:
TV System; gives information about the video system of the selected transmitter.
- BG: BG signal received
- DK: DK signal received
- I: PAL I signal received
- L: SECAM L signals received
- M38.9: NTSC M signal received with video carrier on 38.9 MHz
- MN: NTSC M signal received

Line 19:
Audio System; gives information about the audio system of the selected transmitter.
- Sound Muted: No sound
- Dolby Pro Logic: Dolby Pro Logic sound received
- Mono: Mono sound received
- Stereo: Stereo sound received
- Dual I: Language I received
- Dual II: Language II received
- Digital Mono: Digital mono sound is received
- Digital Stereo: Digital stereo sound is received
- Digital Dual I: Digital language I is received
- Digital Dual II: Digital language II is received

Line 20:
Tuned bit; gives information about the tuning method of the stored pre-set. If the value is 'Yes' the pre-set is stored via manual entry of the frequency when a transmitter was not present on that frequency. In that case the TV will attempt to perform a micro-search every time the pre-set number is selected. Once the micro-search has been successful the Tuned Bit will be set to 'No'.

Line 21:
Speaker config.; gives the configuration setting for the speakers. In case the set is a Non-Dolby set there will be displayed '0'. If it is a Dolby-set then is displayed: 'Full internal', 'L/R external', 'Surround external' or 'Full external'. For the Dolby-set the speaker configuration can be changed via the 'cursor left' and 'cursor right' keys on the remote control handset after opening the installation menu and selecting 'SETUP'. The installation menu can be opened by pressing 'timer' and 'enlarge' at the same time. This feature is only available when the set has virtual Dolby.

Line 22:
Digital Sources; gives the configuration setting for the digital source. This can be 'FRONT', 'EXT1', 'EXT2' or 'None'. If one of these is selected the starting point is a top quality signal on that input and a number of settings are therefore changed automatically. The digital source can be changed via the 'cursor left' and 'cursor right' keys on the remote control handset after opening the installation menu and selecting 'SETUP'. The installation menu can be opened by pressing 'timer' and 'enlarge' at the same time.

5.3 Problems and solving tips

Below described problems are all related to TV-settings. The procedures to change the value or the status of the different settings are described in the paragraph 'Detailed explanation of the Customer Service Mode'.

5.3.1 Picture problems

Worse picture quality in case of DVD pictures
Check line 22 'Digital sources'. In case line 22 gives the indication 'Not Present' change the setting into 'Present'.

Snowy/noisy picture
1. Check line 15 'Noise Figure'. In case the value is 127 or higher and the value is also high on other programs check the aerial cable/aerial system.

2. Check lines 9 'Sharpness' and 15 'Noise Figure'. In case the value of line 9 is 3 or 4 and the value of line 15 is high (127 or higher), lower the value of line 9 'sharpness'.

Picture too dark

1. Press 'Smart Picture' button on the Remote Control handset. In case picture improves, raise the brightness value or raise the contrast value. The new value(s) are automatically stored for all TV channels.
2. After switching on the Customer Service Mode the picture is OK. Raise the brightness value or raise the contrast value. The new value(s) are automatically stored for all TV channels.
3. Check lines 6 'LS Brightness' and 7 'LS Contrast'. The value of line 6 is low (<10) or the value of line 7 is low ((10). Raise the brightness value or raise the contrast value.

Picture too bright

1. Press 'Smart Picture' button on the Remote Control handset. In case picture improves, reduce the brightness value or reduce the contrast value. The new value(s) are automatically stored for all TV channels.
2. After switching on the Customer Service Mode the picture is OK. Reduce the brightness value or reduce the contrast value. The new value(s) are automatically stored for all TV channels.
3. Check lines 6 'LS Brightness' and 7 'LS Contrast'. The value of line 6 is high (>40) or the value of line 7 is high ((50). Reduce the brightness value or raise the contrast value.

White line around picture elements and text

1. Press 'Smart Picture' button on the Remote Control. In case picture improves, reduce the sharpness value. The new value(s) are automatically stored for all TV channels.
2. After switching on the Customer Service Mode the picture is OK. Reduce the sharpness value. The new value(s) are automatically stored for all TV channels.
3. Check line 8 'Sharpness'. Reduce the sharpness value. The new value(s) are automatically stored for all TV channels.

No picture

Check line 20 'Tuned bit'. In case the value is 'Yes', install the required program again: open the installation menu by pressing 'timer' and 'enlarge' at the same time and perform manual installation.

Blue picture

No proper signal is received. Check the aerial cable/aerial system.

Blue picture and/or unstable picture

A scrambled or decoded signal is received.

Black and white picture

Check line 5 'LS colour'. In case the value is low ((10) raise the value of colour. The new value(s) are automatically stored for all TV channels.

No colours/colour lines around picture elements

1. Check lines 17 'Colour System' and 18 'TV System'. In case line 17 is 'PAL' and line 18 is 'M38.9', the installed system for this pre-set is 'USA', while 'West Europe' is required. Install the required program again: open the installation menu by pressing 'timer' and 'enlarge' at the same time and perform manual installation. Select 'System; West Europe'.
2. In case line 17 is 'PAL' and line 18 is 'L', the installed system for this pre-set is 'France', while 'West Europe' is required. Install the required program again: open the installation menu by pressing 'timer' and 'enlarge' at the same time and perform manual installation. Select 'System; West Europe'.

No colours/noise in picture

1. Check lines 17 'Colour System' and 18 'TV System'. In case line 17 is 'Black and White' and line 18 is 'BG', the installed system for this pre-set is 'West Europe', while 'USA' is required. Install the required program again: open the installation menu by pressing 'timer' and 'enlarge' at the same time and perform manual installation. Select 'System; USA'.
2. In case line 17 is 'Black and White' and line 18 is 'L', the installed system for this pre-set is 'France', while 'USA' is required. Install the required program again: open the installation menu by pressing 'timer' and 'enlarge' at the same time and perform manual installation. Select 'System; USA'

Colours not correct

Check lines 17 'Colour System' and 18 'TV System'. In case line 17 is 'PAL' and line 18 is 'L', the installed system for this pre-set is 'France', while 'West Europe' is required. Install the required program again: open the installation menu by pressing 'timer' and 'enlarge' at the same time and perform manual installation. Select 'System; West Europe'.

Colours not correct/unstable picture

Check lines 17 'Colour System' and 18 'TV System'. In case line 17 is 'SECAM' and line 18 is 'BG', the installed system for this pre-set is 'USA', while 'France' is required. Install the required program again: open the installation menu by pressing 'timer' and 'enlarge' at the same time and perform manual installation. Select 'System; France'.

Unstable picture

Check lines 17 'Colour System' and 18 'TV System'. In case line 17 is 'SECAM' and line 18 is 'M 38,9', the installed system for this pre-set is 'West Europe', while 'France' is required. Install the required program again: open the installation menu by pressing 'timer' and 'enlarge' at the same time and perform manual installation. Select 'System; France'.

Menu text not sharp enough

1. Press 'Smart Picture' button on the Remote Control handset. In case picture improves, reduce the contrast value. The new value(s) are automatically stored for all TV channels.
2. After switching on the Customer Service Mode the picture is OK. Reduce the contrast value. The new value(s) are automatically stored for all TV channels.
3. Check line 7 'LS Contrast'. The value of line 7 is high (>50). Reduce the contrast value.

5.3.2 Sound problems

No sound from left and right speaker

1. Press 'Smart Sound' button on the Remote Control handset. In case sound improves, raise the volume value. The new value(s) are automatically stored for all TV channels.
2. After switching on the Customer Service Mode the volume is OK. Raise the volume value. The new value(s) are automatically stored for all TV channels.
3. Check line 4 'LS Volume'. The value is low. Raise the value of 'Volume'. The new value(s) are automatically stored for all TV channels.

Sound too loud for left and right speaker

1. Press 'Smart Sound' button on the Remote Control handset. In case sound improves, reduce the volume

value. The new value(s) are automatically stored for all TV channels.
2. After switching on the Customer Service Mode the volume is OK. Reduce the volume value. The new value(s) are automatically stored for all TV channels.
3. Check line 4 'LS Volume'. The value is high. Reduce the value of 'LS Volume'. The new value(s) are automatically stored for all TV channels.

5.4 ComPair

5.4.1 Introduction

ComPair (Computer Aided Repair) is a service tool for Philips Consumer Electronics products. ComPair is a further development on the DST service remote control allowing faster and more accurate diagnostics. ComPair has three big advantages:

- ComPair helps you to quickly get an understanding how to repair the EM2E in short time by guiding you step by step through the repair procedures.
- ComPair allows very detailed diagnostics (on I^2C level) and is therefore capable of accurately indicating problem areas. You do not have to know anything about I^2C commands yourself; ComPair takes care of this.
- ComPair speeds up the repair time since it can automatically communicate with the EM2E (when the micro processor is working) and all repair information is directly available. When ComPair is installed together with the SearchMan EM2E electronic manual, schematics and PWB's are only a mouse-click away.

ComPair consists of a Windows based fault finding program and an interface box between PC and the (defective) product. The ComPair interface box is connected to the PC via a serial or RS232 cable. In case of the EM2E chassis, the ComPair interface box and the television communicate with each other via a bi-directional service cable.

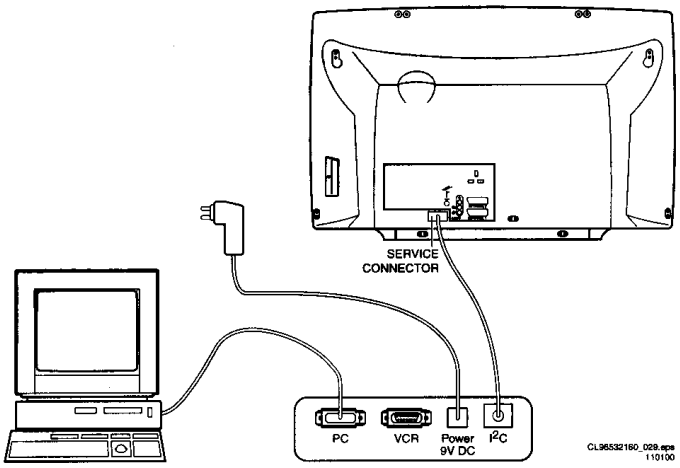

Figure 5-3

The ComPair fault finding program is able to determine the problem of the defective television. ComPair can gather diagnostic information in 2 ways:

1. Communication to the television (automatic)
2. Asking questions to you (manually)

ComPair combines this information with the repair information in its database to find out how to repair the EM2E.

Automatic information gathering

Reading out the error buffer, ComPair can automatically read out the contents of the entire error buffer.
Diagnosis on I^2C level. ComPair can access the I^2C bus of the television without a physical connection. ComPair can send and receive infrared commands to the micro controller of the television. These commands are translated by the controller to I^2C commands and vice versa. In this way it is possible for ComPair to communicate (read and write) to devices on the I^2C busses of the EM2E.

Manual information gathering

Automatic diagnosis is only possible if the micro controller of the television is working correctly and only to a certain extend. When this is not the case, ComPair will guide you through the fault finding tree by asking you questions and showing you examples. You can answer by clicking on a link (e.g. text or an oscillogram) that will bring you to the next step in the faultfinding process.

A question could be: Does the screen give a picture? (Click on the correct answer) YES / NO
An example can be: Measure test point I7 and click on the correct oscillogram you see on the oscilloscope

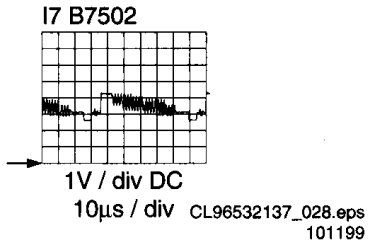

Figure 5-4

By a combination of automatic diagnostics and an interactive question/answer procedure, ComPair will enable you to find most problems in a fast and effective way.

Additional features

Beside fault finding, ComPair provides some additional features like:

- Uploading/downloading of pre-sets
- Managing of pre-set lists
- Emulation of the Dealer Service Tool

5.4.2 SearchMan (electronic service manual)

When ComPair is installed in combination with SearchMan, all schematics and PWB's will be directly available while you repair a television if you click on a PWB or schematic link.
Example: Measure the DC voltage on C2568 (PWB/schematic) on the small signal level.
Clicking on PWB will automatically pop-up a picture of the PWB with the location of C2568 marked. Clicking on schematic will automatically pop-up the schematic with the location of C2568 marked.

5.4.3 Stepwise Start-up / Shutdown feature of set can be used via ComPair

Under normal circumstances, a fault in the power supply or an error during start-up will switch the television to protection-mode. ComPair can take over the initialisation of the television. In this way it is possible to distinguish which part of the start-up routine (hence which circuitry) is causing the problem.

Stepwise start-up explanation
Via ComPair the stepwise start-up can be realised. This is very helpful when a protection is activated (see also chapter 5.6).

State	Description mode	Display LED (Red)	Activate protection
0	Low Power Standby: 5V2/3V3 present, uP in Standby.	On	None
1	High Power Standby: TV-set in Standby.	Wait 1s, flash 1 time	None
2	Main Power On: 5V/ 8V present, HOP in Standby.	Wait 1s, flash 2 times	4, 5
3	HOP On: EHT startup, blackcurrent stabilisation off, picture blanked.	Wait 1s, flash 3 times	Plus 6, 2 & 1
4	Initialised. All IC's are initialised, blackcurrent stabilisation is on.	Wait 1s, flash 4 times	Plus rest
5	TV On: TV-set operates, unblanked picture.	Wait 1s, flash 5 times	

Stepwise shutdown explanation
In the stepwise shutdown mode, state 2 is skipped. (IC's can not be de-initialised).

State	Description mode	Display LED (Red)	De-activate protect.
5	TV On: TV-set operates, unblanked picture.	Wait 1s, flash 5 times	-
4	Initialised. All IC's stay initialised, blackcurrent stabilisation is on.	Wait 1s, flash 4 times	-
3	HOP On: EHT startup, blackcurrent stabilisation off, picture blanked.	Wait 1s, flash 3 time	6, 2, 1
1	High Power Standby: TV-set in Standby.	Wait 1s, flash 1 time	4, 5
0	Low Power Standby: 5V2/3V3 present, uP in Standby.	On	

Note: When set is in stepwise-mode and due to stepping-up a protection is activated, the set really will go into protection (blinking red led). The set will not leave the stepwise-mode however. By stepping up the set can be activated again, until state X, where protection was activated. At state (X-1) diagnostic measurements can be performed.

5.5 Error codes

5.5.1 Reading error codes from the error buffer

The error buffer can be read in 3 ways:

1. On the screen via the Service Alignment Mode (SAM). In case picture is OK, the error buffer can be read easiest via the SAM. In the main menu of the SAM the last 10 different error codes occurred are displayed. The most recent detected error code is displayed on the left side, so e.g.:
   - 0 0 0 0 0 means no error codes present in the buffer
   - 3 0 0 0 0 means one error code present in the buffer; error code 3
   - 2 3 0 0 0 means two error codes present in the buffer; error code 2 is the most recent, error code 3 is detected before 2.
2. Via the blinking LED procedure. The contents of the error buffer can also be made visible through the "blinking LED" procedure. This is especially useful when there is no picture. There are two methods:
   - When the SDM is entered, the LED will blink the number of times, equal to the value of the last (newest) error code (repeatedly).
   - Via the 'DIAGNOSE' key of the DST. If an error has been detected by the EM2E chassis, the set might go into protection. Without the presence of a picture, the errors can be displayed via the red LED on command of the DST, as long as the main-processor is still active. To display the errors via the red LED by the DST:
     1. Press the 'DIAGNOSE' key (in all modes except the SAM).
     2. Press '1' to view the last error detected (or '2', etc. to show the errors before).
     3. Press the 'OK' key. The blinking Red LED on the TV will now give the requested error.

     Example:
     Error code position 1 - 2 - 3 - 4 - 5
     Error buffer: 12 - 9 - 5 - 0 - 0

     After entering SDM: blink 1x long (750 ms for tens) - pause (1.5 s) - blink 8 x short (250 ms for units) - etc.
     After transmitting 'DIAGNOSE-2-OK' with the DST: blink 9 x short - pause (250 ms) - blink 9 x short - etc.
     After transmitting 'DIAGNOSE-3-OK' with the DST: blink 5 x short - pause (250 ms) - blink 5 x - etc.
     After transmitting 'DIAGNOSE-4-OK' with the DST: nothing happens
3. Via ComPair.

5.5.2 Clearing the error buffer

The error buffer can be cleared in 3 ways:

1. In the SAM by selecting the item 'RESET ERROR BUFFER' in the main menu.
2. By the 'DIAGNOSE 99' command of the DST (in all modes except the SAM). Press the DIAGNOSE key on the DST, followed by 9, 9 and then 'OK'.
3. Via ComPair.

Note: When error buffer is full (10 codes), no new error can be stored anymore. However of every error raised is monitored how long it exists in the error buffer. When for any reason a false raised error exists in the buffer, it will be deleted after 50 hours. If this error is still present after 50 hours, it will be raised again. In this way it is safeguarded that the error codes history is stored. Sometimes it is an option to first write down the error buffer content, reset the buffer, and look again which error codes are generated by the set.

5.5.3 Error code table

Error	Device	Description	Defective item	Diagram	Defect. module indication
1	ST24E32	NVM	7011	B5	Control
2	H fail protection	HFB			Horizontal Flyback
3	SAA4978	PICNIC	7709	B3	Feature Box
4	Supply 5 V	5V2			+5 V Supply
5	Supply 8 V	8V6			+8 V Supply
6	Slow I²C-bus blocked				Slow I²C blocked
7	TDA9330	HOP video control/geometry	7301	B4	Video Controller
8	TDA9320	HIP I/O-video processing	7323	B2	Chroma IF IO
9	X-ray protection			A3	
11	HOP protection				
12	Tuner protection	TUNER_PROT			+8 V (Tuner) Supply
13	UV1316	Tuner	U1200	A7	Tuner
14	MSP3451/3415	ITT sound processor + Dolby	7651	B6	Audio Module
15	Flash protection				
16	Featurebox protection	FBX_PROT			

Remark:If on the DST the text 'ERROR 2' is displayed, this means that the communication from the TV to the DST has failed.

5.6 Protections

5.6.1 General

The EM2E has only one micro-processor (OTC) which remains active during Standby. This because power of the microprocessor and the attached memory chip set is coming from the 3V3 supply, which is derived from the 5V Standby-circuitry. So in both Power-on as in Standby-mode the microprocessor is connected to this power supply.

If a fault situation is detected an error code will be generated and if necessary the set will be put in the protection-mode. The protection-mode is indicated by blinking of the red LED at a frequency of 3 Hz. In some error cases the micro processor does not put the set in the protection-mode. The error codes of the error buffer can be read via the service-menu (SAM), the blinking LED procedure or via DST/ComPair. The DST diagnose functionality will force the set into the Service-standby, which is alike the usual Standby, however the micro-processor has to remain in normal operation completely.

To get a quick diagnosis the EM2E has 3 service-modes implemented:

- The Customer Service Mode (CSM).
- The Service Default Mode (SDM). Start-up of the set in a predefined way.
- The Service Alignment Mode (SAM). In this mode items of the set can be adjusted via a menu and with the help of test patterns.

Both SDM & SAM modes can be entered via the 'service pads' on the SSB, via a RC (DST or standard RC) or via ComPair. The SAM can not be entered in Standby, the set has to be in normal operation.

The EM2E 'Protection Diagram' shows the structure of the protection system. See diagram below.

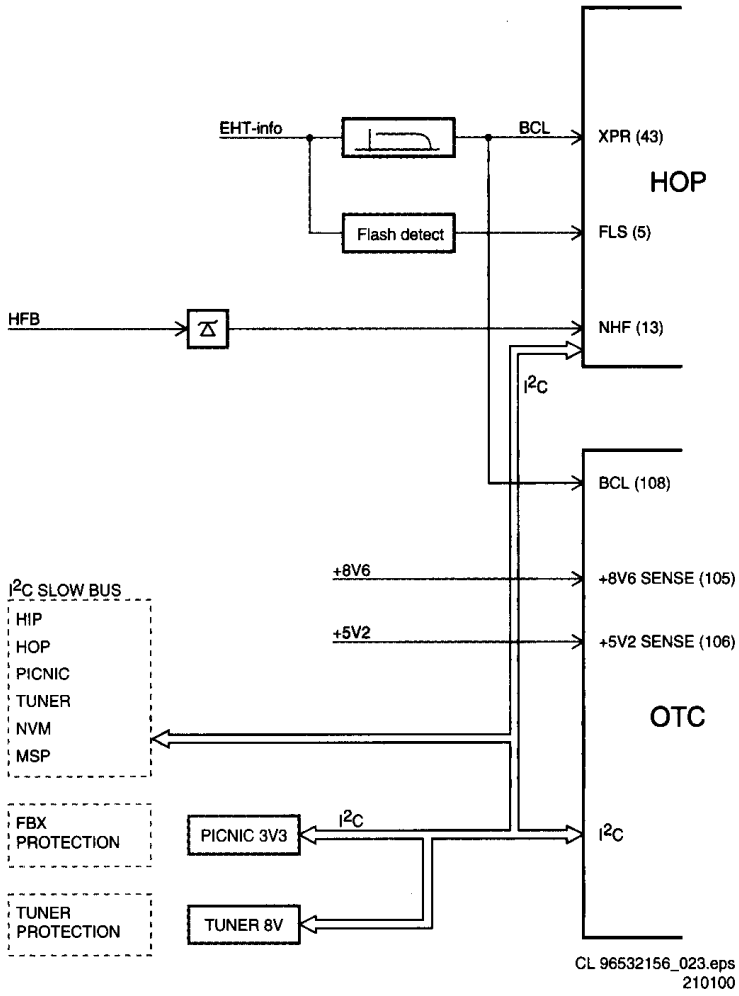

Figure 5-5

There are several types of protections:

- I²C related protections
- OTC related protections (via polling on I/O pins or via algorithms).
- HOP related protections (mainly for deflection items).
- Hardware errors which are not sensed by the OTC (e.g. BRIDGE_PROT)

I²C related protections

In normal operation some registers of the I²C controlled IC's will be refreshed every 200 msec. During this sequence the I²C-busses and the I²C -IC's as well will be checked. The I²C

protection will take place if the SDA and SCL are whether short circuited to ground or to each other. An I^2C error can also occur, if the power supply of the IC is missing (e.g. TUNER_PROT (error 12) & FBX_PROT (error 16)).

OTC related protections

If a protection is detected at an input of the OTC, all protection inputs of the OTC will be scanned every 200 msec. for 5 times. If the protection on one of the inputs is still activated after 1 sec., then the set will be put in the protection-mode. Before the scanning is started a so-called ESD-refresh will be carried out first, because the interrupt on one of the inputs may be caused either by a FLASH or by ESD. As a FLASH or ESD can harm the settings of some IC's, the HOP-HIP-MSP-PICNIC-NVM and Tuner are initialised again to ensure the normal picture and sound conditions of the set.

- 8.6 V and 5.2 V protection. The presence of the 8.6 V and 5.2 V is sensed by the OTC. If these voltages are not present, then an error code is stored in the error buffer of the NVM, and the set is put in the protection-mode.

HOP related protections

Every 200 msec. the status register of the HOP is read by the OTC via I^2C. If a protection signal is detected on one of the inputs of the HOP, then the relevant error bit in the HOP register is set to 'high'. If the error bit is still 'high' after 1 sec., the OTC will store the error code in the error buffer (NVM) and depending on the relevancy of the error bit the set will either go into the protection-mode or not.

- HFB: Horizontal Flyback. If the horizontal flyback is not present, then this is detected via the HOP (HFB_X-RAY_PROT). One status bit is set to 'high'. The error code is stored in the error buffer and the set will go into the protection mode
- Flash detection. From the EHT-info, via D6303 and T7303 a flash will stop the H-drive and line output stage immediately. The FLS-bit in the status register of the HOP is set to 'high'. As the duration of a flash is very short the FLS-bit will be reset to 'low' again after the flash refresh, so via a slow start the set will be started again.

Hardware related protections

Due to the architecture (with 'hot' deflection) there are two protections that are 'unknown' to the microprocessor, namely the 'BRIDGE_PROT' from the line-stage and the 'NO_VFB' protection form the frame-stage. If one of these protections is triggered, the set is positioned in 'Standby'-mode. The OTC will now try to re-start the set. If this will not succeed after 5 times (after ≈ 1 minute), the OTC will generate error 15 (Flash protection) and will start the blinking red LED.

5.7 Repair tips

5.7.1 General

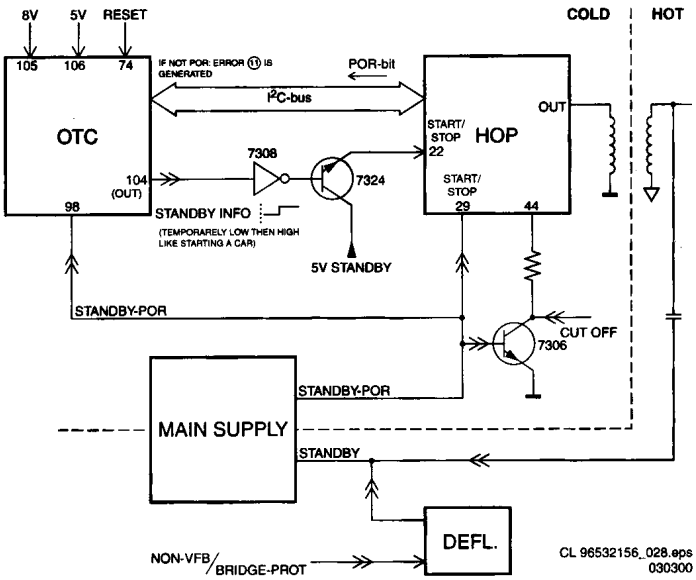

Figure 5-6

The start-up of the set is very different as of other sets:

1. When the set is switched 'ON', first the HOP is placed in 'low power start-up' mode (HOP-standby-mode). This means that 5 V (derived from available Standby-supply) is connected to pin 22 of the HOP-IC.
2. Now the HOP is driving the line-circuitry with 50 kHz pulses. At the base of the line-transistor this is sensed via the 'STANDBY'-line.
3. This signal triggers the Main supply to operate. Now the line-stage has 'BAT'-voltage (141 V), it will also start.
4. After the 5 and 8 V-supply lines are sensed by the OTC, it will read the POR-bit from the HOP via the I^2C-bus.
5. Now the HOP is switched in 'ON'-mode and the set will start-up further with normal drive (31.25 kHz for PAL).
6. The last step will be the unblanking of the picture.

SO STANDBY IS NOT CONTROLLED VIA A STANDBY-LINE FROM MICROPROCESSOR, BUT IS ACHIEVED INDIRECTLY VIA THE HOP-CIRCUITRY.

Notice that a very big part of the set (Large Signal Panel) is 'hot', meaning the primary part of the Standby supply, the whole Main supply (except for the secondary Audio supply) and the complete deflection circuit. SO NOTICE THAT THE DEFLECTION-COIL IS HOT!

This set does not have an IR transmitting-LED anymore. In its place, a Service (ComPair) connector is implemented at the rear of the set, which is directly accessible. In addition to this, there is a blinking LED procedure to show the contents of the error buffer.

The relay you hear during switching 'ON' (via the main switch) is from the degaussing-circuitry. So it is not used for switching the supply as in the MG-chassis.

When using ComPair (connect cable to ComPair-connector at the rear of the set, placed behind a separate cover), there exists the possibility to have a stepwise start-up procedure. With this mode one can startup the set step-by-step. This also means that in certain steps some protections will not be activated. This can sometimes be convenient during repair. See table in 5.4.3, which is describing the stepwise start-up mode with belonging LED behaviour.

On the SSB there are 'service pads' implemented to activate (via bridging) the SDM- or SAM-mode (see chapter 4). When the SDM-mode is activated, the processor-controlled protections (so not the Hardware and HOP-protections) can be overruled. This means that the ADC-input protections (5- and 8 V) and the I^2C not-acknowledging info from Tuner and FBX can be overruled.
WHEN DOING SO THE SERVICE-ENGINEER MUST KNOW WHAT HE IS DOING, AS IT COULD LEAD TO DAMAGING THE SET.

'Repair-tips how to repair the Main power supply:

- Simplest way is to replace components of the Main supply with repair kit (3122 785 90100)
- More detailed way:
  - Replace FET 7504 and zener 6505
  - Remove SSB-panel
  - Short-circuit BE of TS7529 in order to put supply in 'on'-mode (TS7529 is blocking then)
  - Load capacitor C2515 (V_{BAT}) with a load of 500 ohm. Supply can not work without a minimum load.
  - Use a variac to slowly increase the V_{MAINS}. Measure over sensing-resistors R3514/15 whether a nice sawtooth-voltage becomes available. Also measure the V_{BAT}-output
  - V_{BAT} may never exceed 141 V. If so there is something wrong in the feedback-circuitry (e.g. regulator 7506)

Repair-tips how to repair the Standby power supply:

- Simplest way is to replace components of the Standby supply with repair kit (3122 785 90110)

Repair-tips how to repair the Deflection-circuitry:

- Simplest way is to replace components of the Deflection-circuitry with repair kit (3122 785 90120)

Service-tips:

- Be careful measuring on gate of FET 7504. Circuitry is very high ohmic and can easily be damaged.
- Take care not to touch 'hot' heatsink while disconnecting SSB, despite the fact that mains cord is out of mains socket. There still is an annoying rest-voltage for a short while.
- Do not try to measure on side of SSB directed to the hot heatsink. This is dangerous. All service test points are guided to the Tuner side and are pointed out by service printing. Where the circuitry was too crowded to place this service-printing it has been explained on the Test point overviews in this manual

5.7.2 Repair tips

Phenomenon	Possible Cause	Repair-tip
No picture, no LED.	Standby Supply defective.	Measure circuitry (see diagram A2). Start at testpoint P16. Regardless the mode of the set, this voltage should always be available.
No picture, red LED (high intensity) despite expectation the set should be 'on' (this looks like Standby).	There are 2 protections that are not 'seen' by processor, that force set in 'Standby'-mode, namely 'NO-VFB-prot' (= no frame-deflection), or 'BRIDGE_PROT' (safety error).	If protection is activated by 'NO_VFB-prot', this can be measured with a scope on service test point F10 (diagram A4). Before this protection is activated, a few seconds a horizontal white line is visible. The 'BRIDGE_PROT' error may never occur. Is implemented due to legal requirements. Flash protection error (15) will be generated in both cases after 5 restart attempts. Visible via blinking LED procedure. NO_VFB-prot can be determinated by white line.
No picture, red LED blinking (3 Hz).	Set is in protection due to various causes. For error codes see error-code list.	You have no picture, so: - or you read out error buffer via ComPair - or you read out blinking LED information via 'diagnose' x dealer remote - or you read out blinking LED sequence via <default>-button dealer remote - or you read out blinking LED sequence via service default mode entered via RC-command 062596 + 'menu' When error is known, check circuitry related to supply-voltage and I²C-communication.
No picture, red LED blinking code 6,6,6 or 1,1,1	No communication on I²C-bus or NVM-I²C-bus to processor. Set is in protection-mode	As processor cannot communicate with one of the 2 busses it spontaneously starts blinking. Measure dependent of the error on the I²C-bus which device is loading the bus. This protection can be overruled via SDM-entry on SSB or via stepwise start-up mode step 'MainPowerOn'.
No picture, no sound, set is making audible squeaking sound	Supply could be in hiccup-mode which can be heard via supply-transformer squeaking	This could be caused by: - Short-circuited V_{BAT} (caused by short circuited line transistor 7421) or - Short-circuited sound-winding (amplifier is short-circuiting 28 V) or - Short-circuited D6514 (due to a too high V_{BAT}). Delete excessive load to see where failure is caused by or check feed back circuit. See repair-tip main power supply (supply needs a minimal load).
No picture, no sound, LED works fine	Supply does not work correctly	If e.g. V_{BAT} is only about 90 V, regulator-IC 7506 could be damaged.
No RC5-reception. Red LED does not echo RC-commands.	Processor-circuitry or RC-receiver is wrong.	In case set reacts on local keyboard operation, error must be found in the IR-receiver circuitry (diagram E).
Relay-activation (degaussing) not audible when switch set 'on' from 'off'.	Processor not working correctly.	Check RESET-circuitry on diagram B5. When switching on the set all i/o-pins of processor should become high for a moment, so also the degauss-input signal.
No sound, but picture.	Measure P7 on diagram A1. Possible sound-amplifier is broken (but not short-circuited), or sound-enable line is high (see diagram A5). Further the audio-signal path must be measured (HIP, MSP, switch-IC's, amplifier).	Measure and repair. With ComPair there is a beep-test that can determine where the signal stops (use loudspeakers, headphone).
No sound at headphone output.	Discrete amplifiers or supply to it could be damaged.	Measure A12, A13, A14, A15 and supply-line on diagram A6.
Picture is rotated.	Rotation-circuitry or supply to it could be damaged.	Measure test points F3, R1, R2 on diagram A4.
No picture.	Check functionality and cabling Tuner to SSB.	Notice cable 0946.
Picture looks like cushion, further O.K.	Or NVM-content is overwritten or E/W-MOSFET is short-circuited	First check in Service Alignment Mode, whether geometry can be restored. If not check testpoint L4 and diagram A3, or measure with an ohm-meter whether TS7480 is defective.
Very white picture, with flyback lines visible	180 V is missing on CRT-panel	Probably R3468 on LSP (diagram A3) is interrupted, or bad connection plug 0324 to 0224 (CRT-panel).
Un-sharp picture	Focus could be mis-aligned or SCAVEM-circuitry does not work correctly	Align focus-potmeter of Line Transformer; check SCAVEM-circuitry on CRT-panel [F].
Un-synced picture	Sync is derived in HIP-IC from X-tals 1305 and/or 1308	Maybe a X-tal is making bad contact.
Picture distorted.	Check video-path, service default mode.	Investigate whether there exist an error code in the error buffer. In case there is an error code, check I²C-bus and/or supply-lines (see overview supply-lines). Measure and check signal path Tuner, HIP, PICNIC, HOP, RGB-amplifier. In case it is a geometry-issue, check Frame-circuitry, alignments or possible corrupted NVM (7011)
No menu, OSD.	Probably processor is defective.	Measure test points C7, C8, C9, C10 on diagram B5.

cl96532156-037.eps
090200

6. Wiring diagram, blockdiagram, supply diagram and testpoints

Blockdiagram

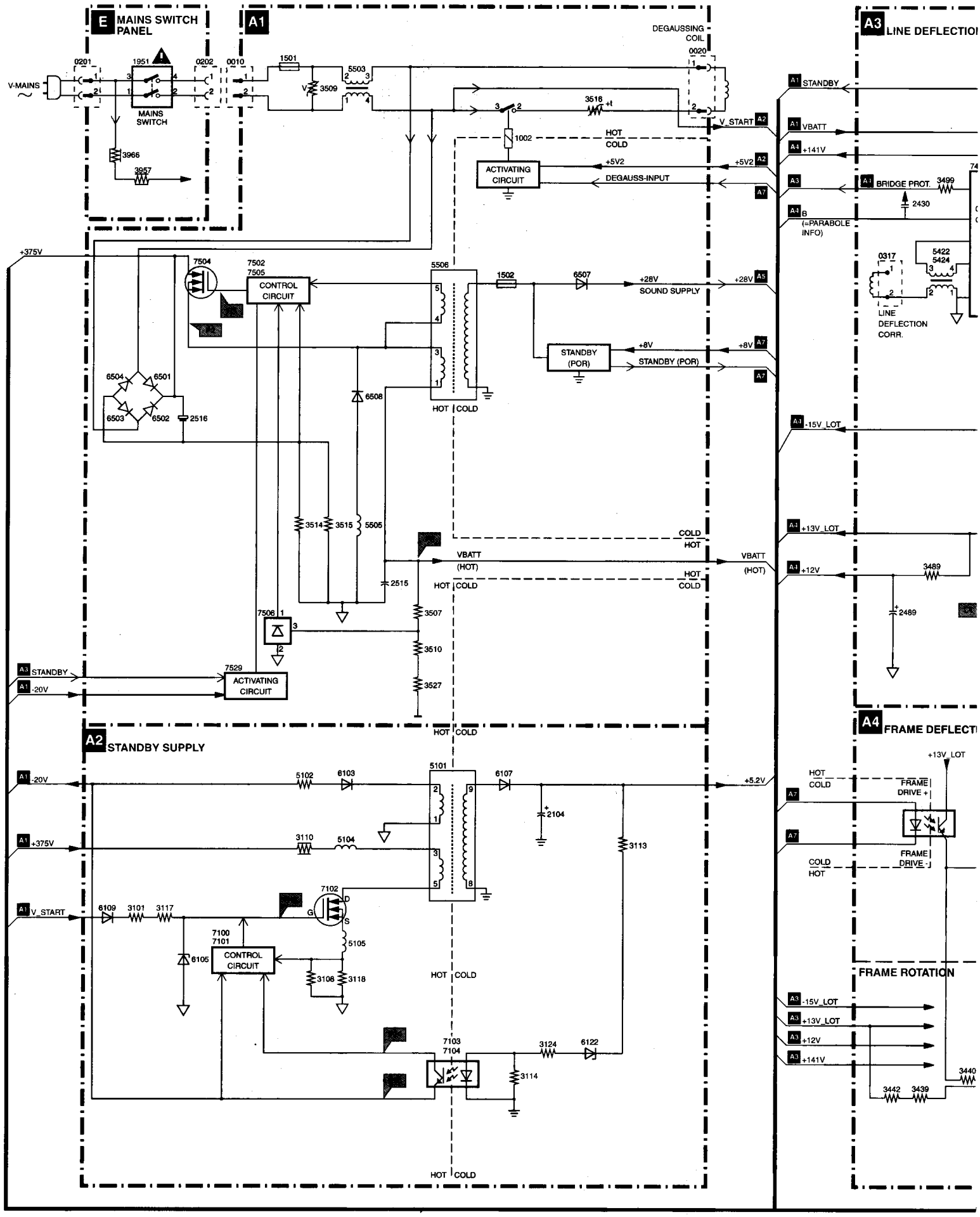

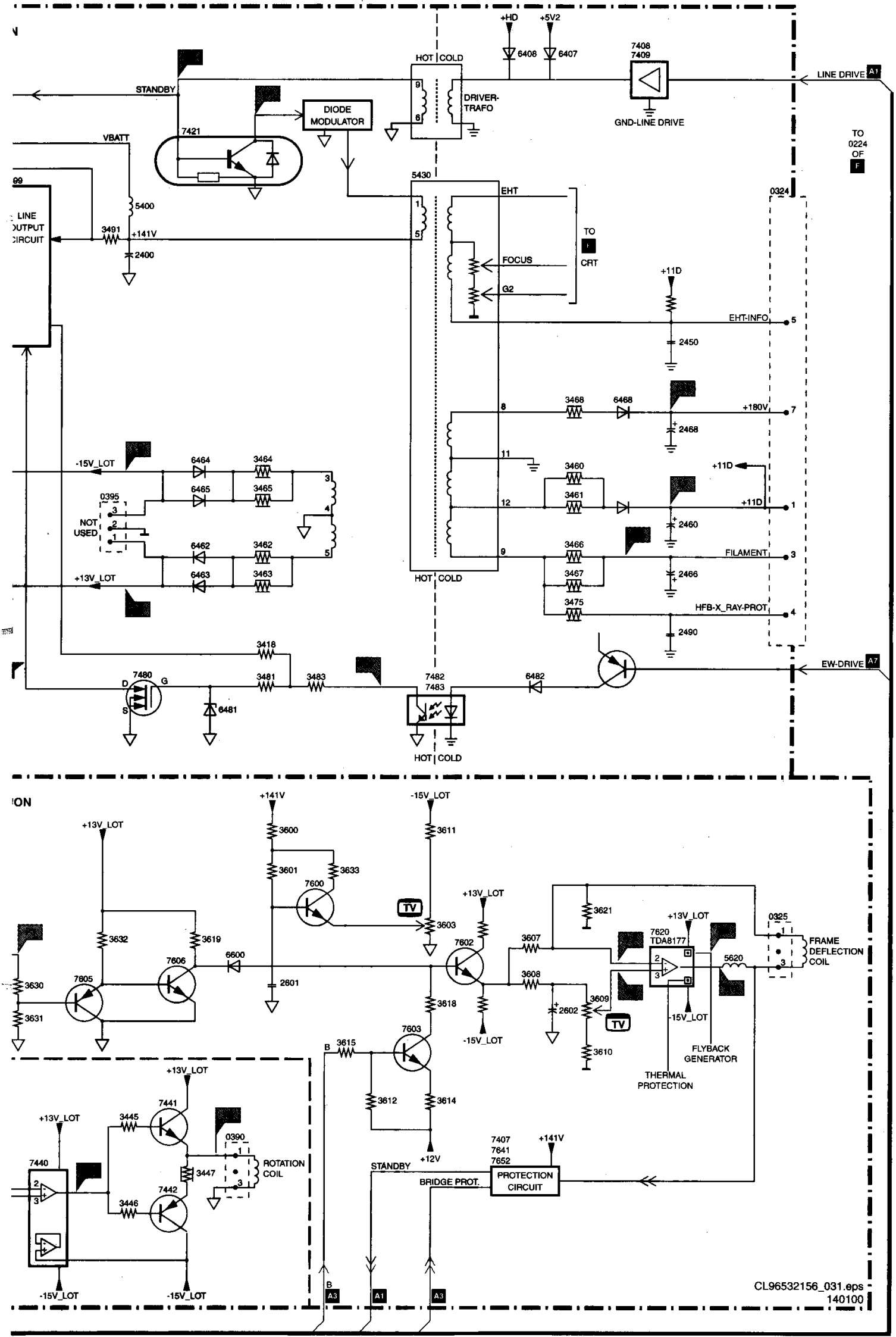
+HD
+5V2
6408
6407
7408
7409
HOT COLD
DRIVER-TRAFO
LINE DRIVE
A1
GND-LINE DRIVE
STANDBY
DIODE MODULATOR
7421
VBATT
TO 0224 OF F
5430
EHT
FOCUS
G2
TO F CRT
0324
LINE OUTPUT CIRCUIT
5400
3491
+141V
2400
+11D
EHT-INFO
2450
3468
6468
+180V
2468
-15V_LOT
6464
3464
6465
3465
0395
NOT USED
6462
3462
6463
3463
+13V_LOT
3460
3461
2460
3466
3467
FILAMENT
2466
3475
HFB-X_RAY-PROT
2490
3418
7480
3481
3483
7482
7483
6482
EW-DRIVE
A7
6481
HOT COLD
+13V_LOT
+141V
-15V_LOT
3600
3611
3601
3633
7600
TV
3603
3632
3619
6600
7606
7605
3630
3631
2601
7602
3607
3608
3621
7620
TDA8177
0325
FRAME DEFLECTION COIL
5620
3609
2602
3610
3618
7603
3615
3612
3614
+12V
THERMAL PROTECTION
FLYBACK GENERATOR
7441
3445
0390
ROTATION COIL
7440
3447
7442
3446
STANDBY
BRIDGE PROT.
7407
7641
7652
PROTECTION CIRCUIT
A3
CL96532156_031.eps
140100

Blockdiagram

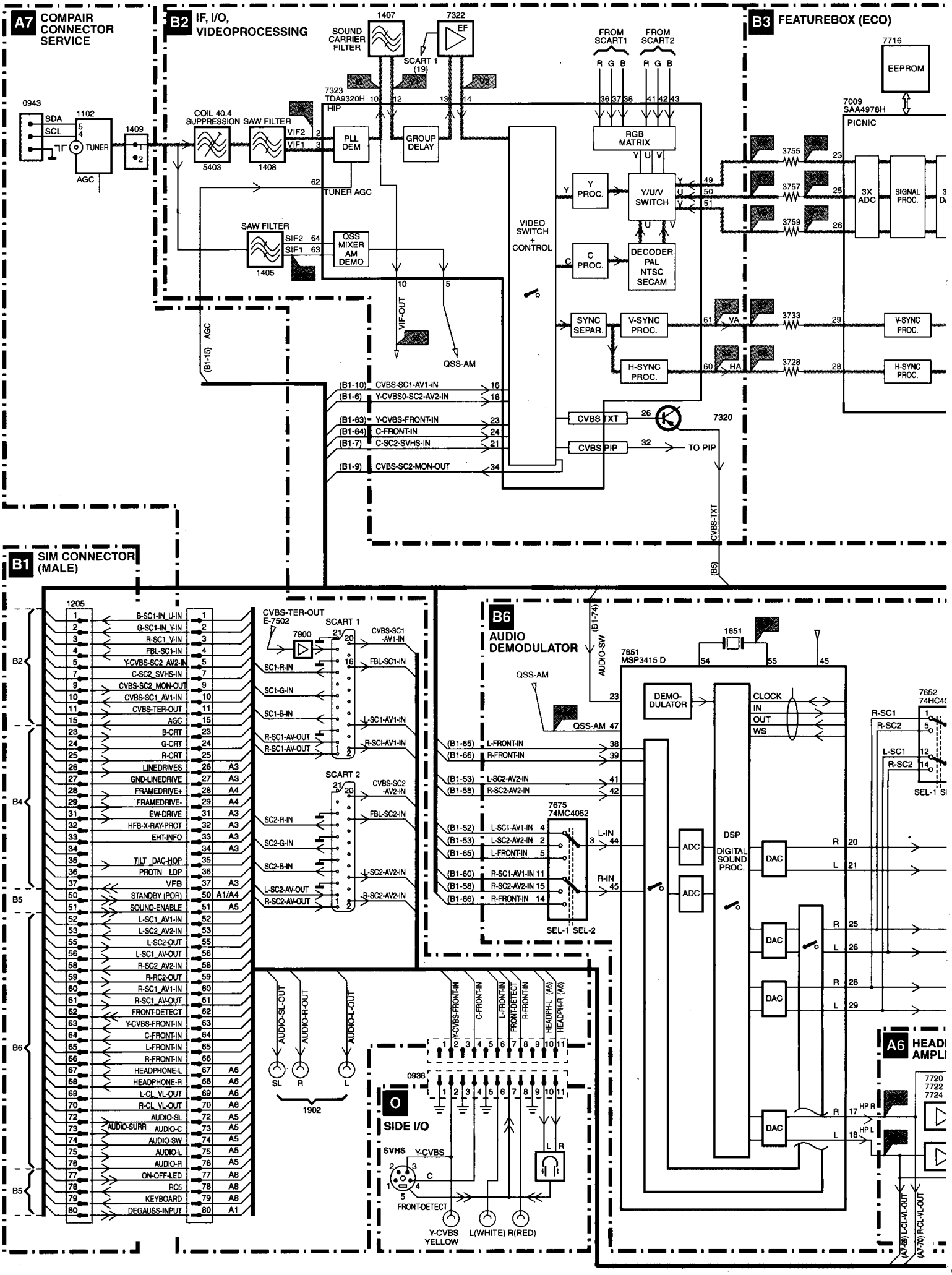

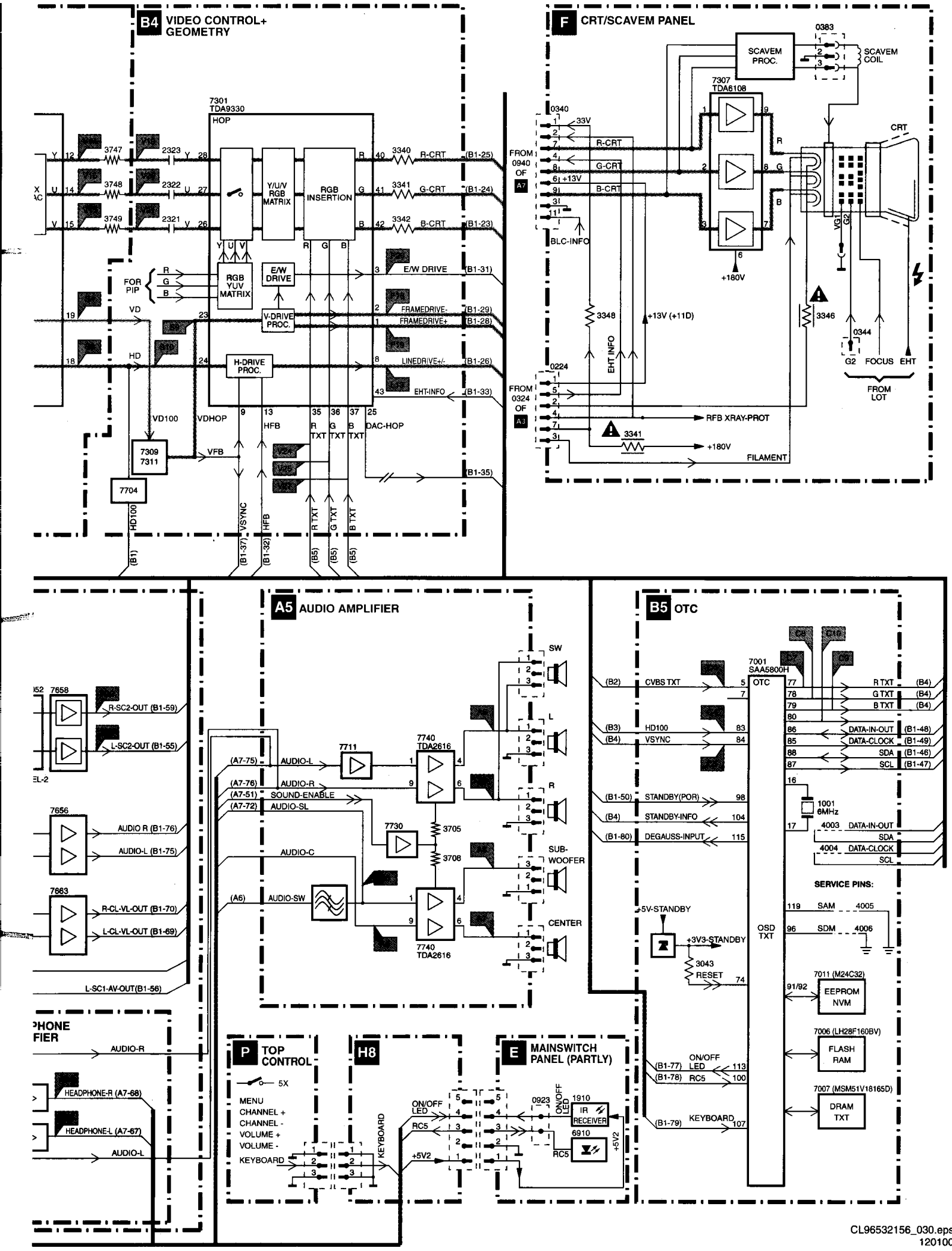

CL96532156_030.eps
120100

Supply lines overview

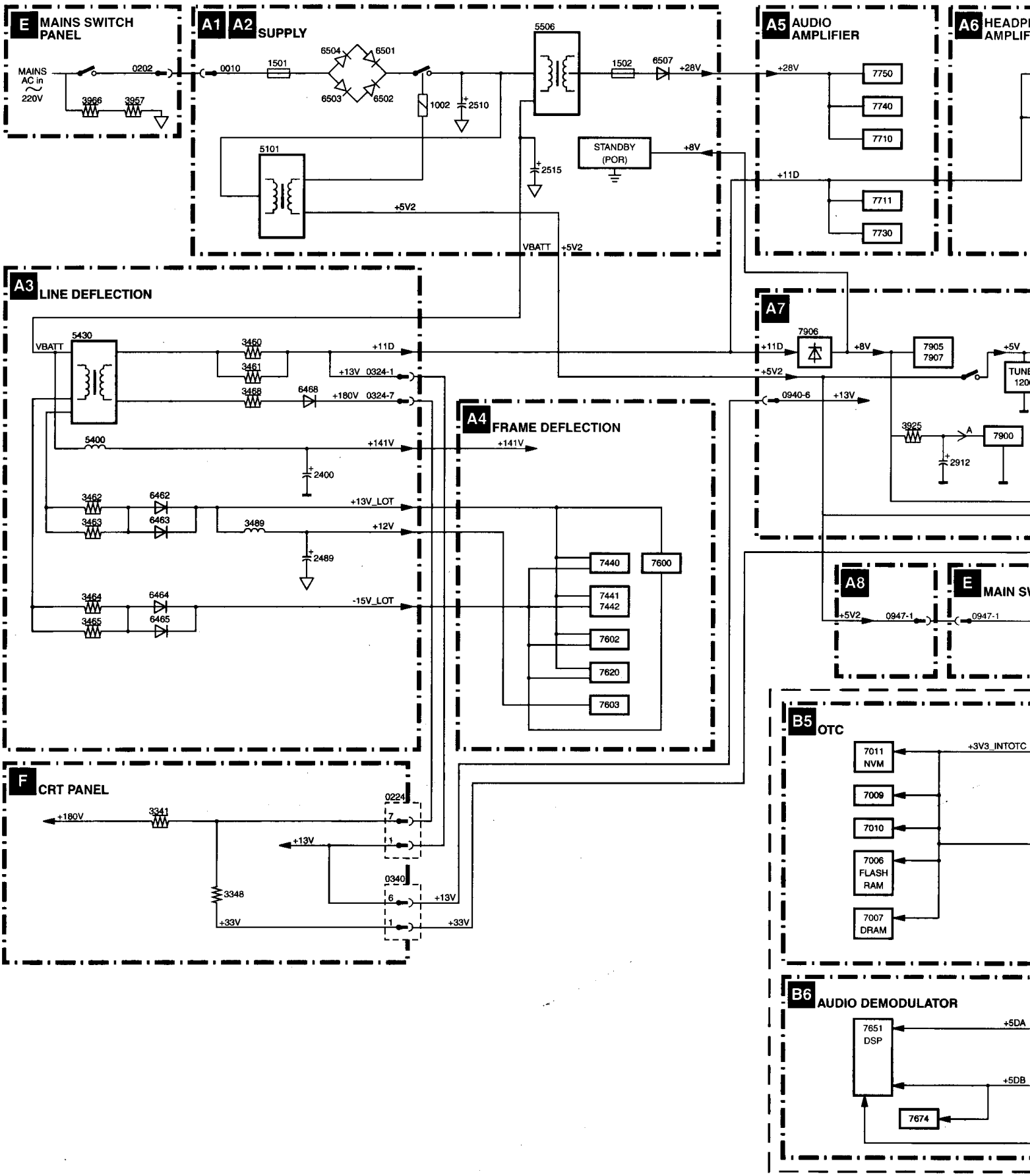

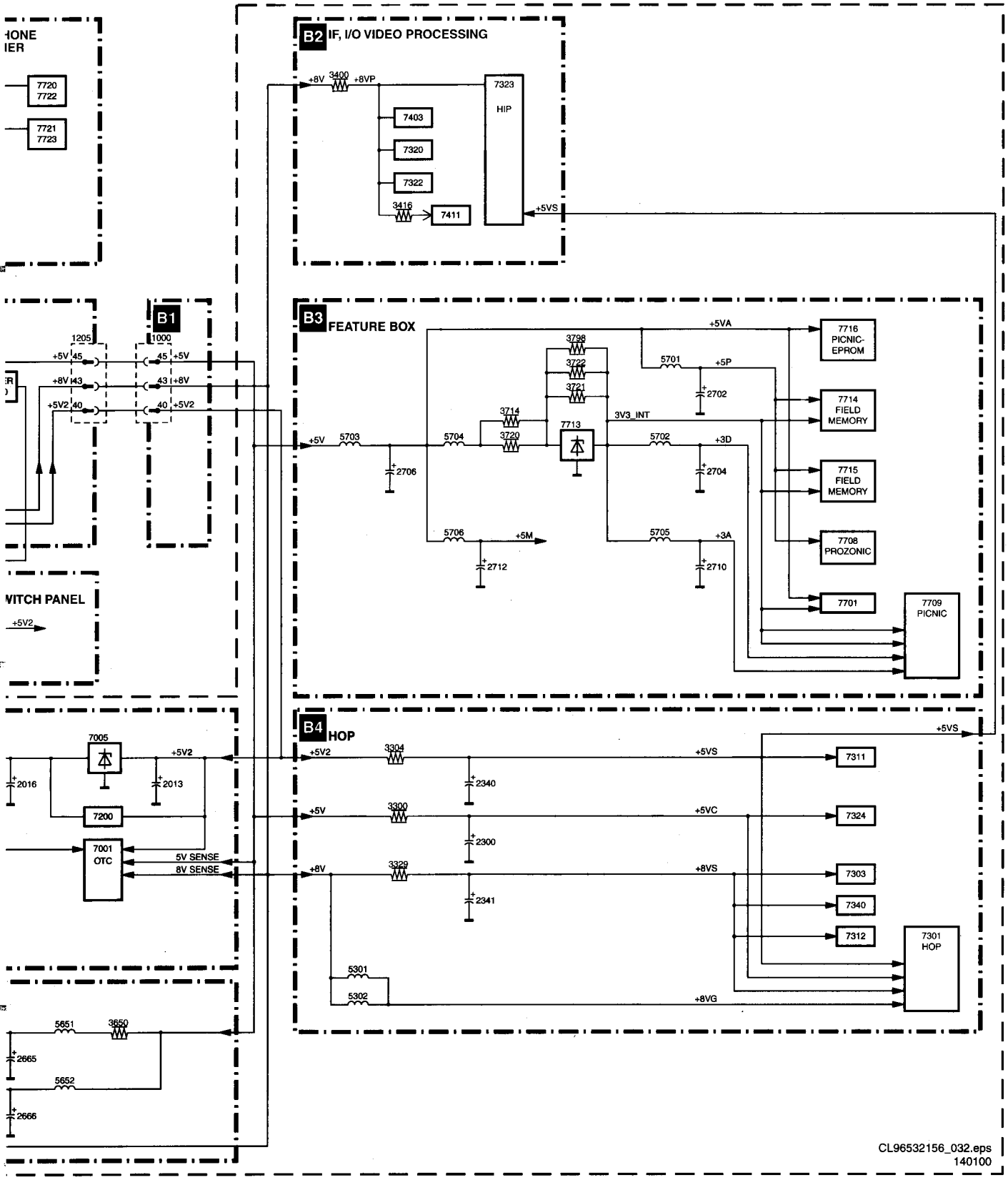
B2 IF, I/O VIDEO PROCESSING
+8V
3400
+8VP
7403
7320
7322
3416
7411
7323
HIP
+5VS
B1
1205
1000
+5V
45
+8V
43
+5V2
40
B3 FEATURE BOX
+5V
5703
2706
5704
3714
3720
3798
3722
3721
7713
3V3_INT
5702
+3D
2704
5701
+5P
2702
+5VA
5706
+5M
2712
5705
+3A
2710
7716
PICNIC-
EPROM
7714
FIELD
MEMORY
7715
FIELD
MEMORY
7708
PROZONIC
7701
7709
PICNIC
WITCH PANEL
+5V2
B4 HOP
7005
+5V2
2016
2013
7200
7001
OTC
5V SENSE
8V SENSE
3304
2340
+5VS
7311
+5V
3300
2300
+5VC
7324
+8V
3329
2341
+8VS
7303
7340
7312
7301
HOP
5301
5302
+8VG
5651
3650
2665
5652
2666
7720
7722
7721
7723
CL96532156_032.eps
140100

I2C bus

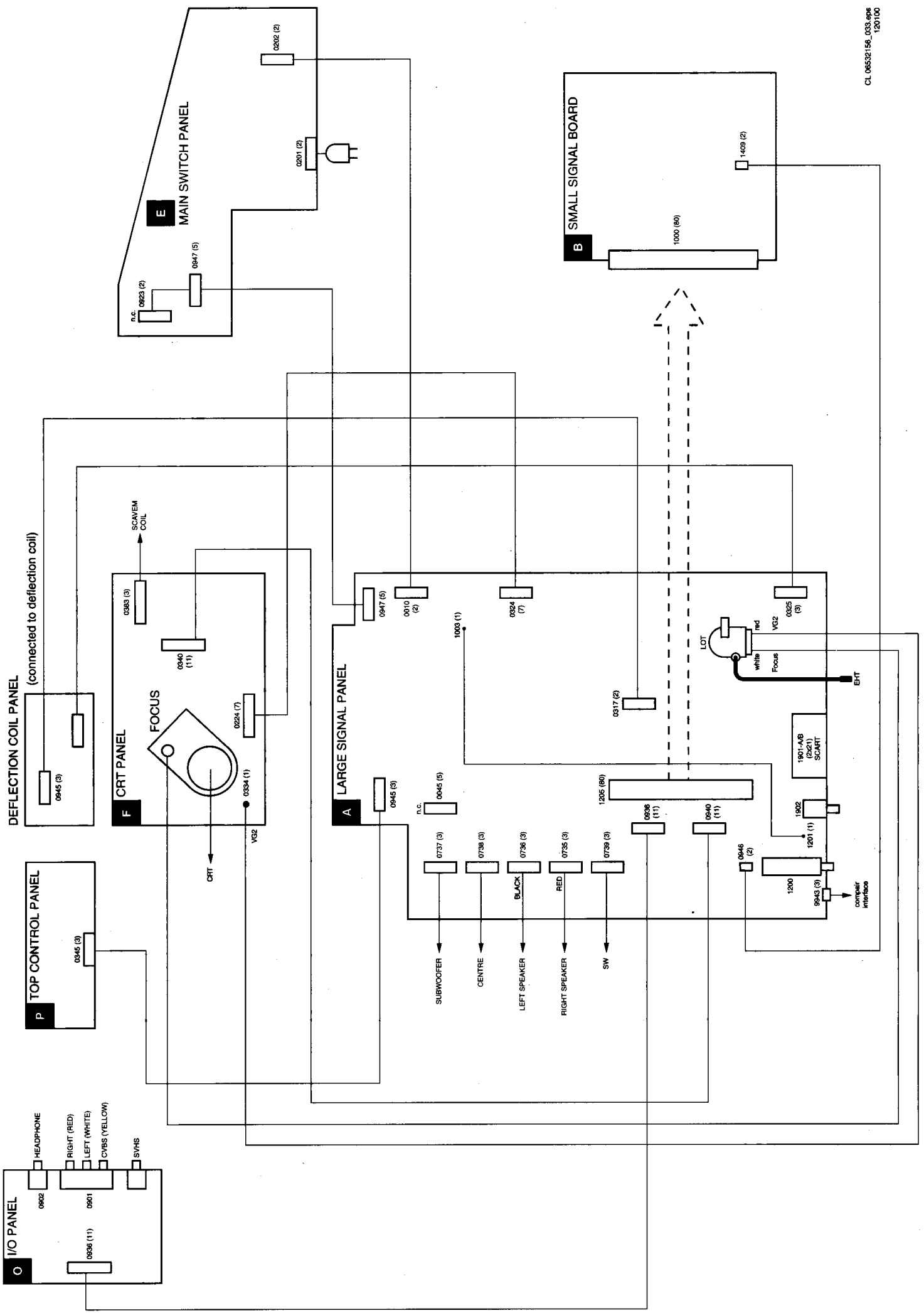
CL 06532156_033.eps
120100
E MAIN SWITCH PANEL
0202 (2)
0201 (2)
0947 (5)
0923 (2)
n.c.
B SMALL SIGNAL BOARD
1409 (2)
1000 (80)
DEFLECTION COIL PANEL
(connected to deflection coil)
0945 (3)
F CRT PANEL
FOCUS
SCAVEM COIL
0383 (3)
0340 (11)
0224 (7)
0334 (1)
CRT
VG2
A LARGE SIGNAL PANEL
0947 (5)
0010 (2)
0324 (7)
0325 (3)
1003 (1)
0317 (2)
LOT
red
white
VG2
Focus
EHT
1901-A/B (2x21) SCART
1902
1201 (1)
1205 (80)
0945 (3)
0045 (5)
n.c.
0936 (11)
0940 (11)
0737 (3)
0738 (3)
0736 (3)
0735 (3)
0739 (3)
BLACK
RED
0946 (2)
1200
9943 (3)
compair interface
SUBWOOFER
CENTRE
LEFT SPEAKER
RIGHT SPEAKER
SW
P TOP CONTROL PANEL
0345 (3)
O I/O PANEL
HEADPHONE
RIGHT (RED)
LEFT (WHITE)
CVBS (YELLOW)
SVHS
0902
0901
0936 (11)

I2C overview

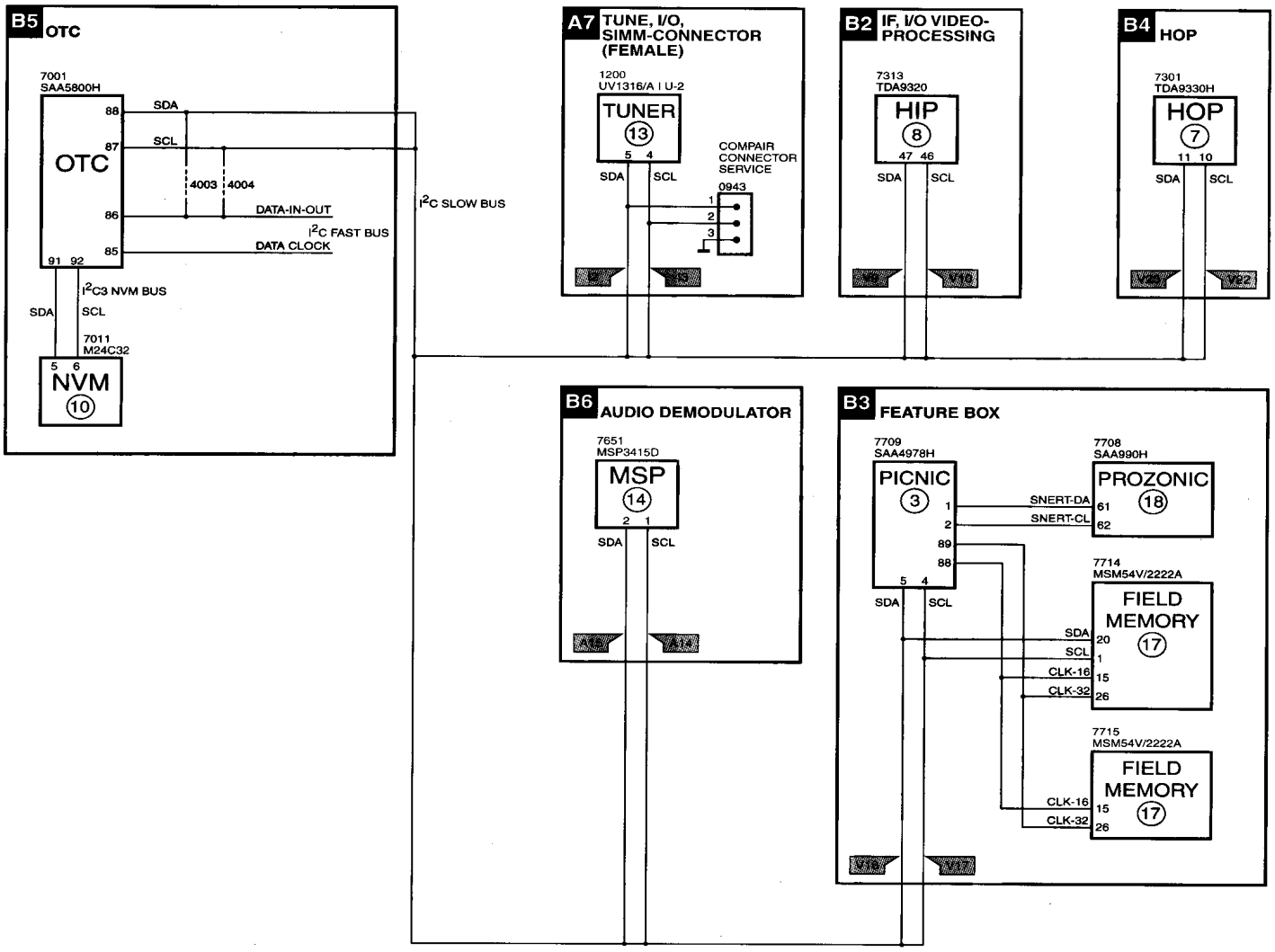

Error	Device	Description	Defective item	Diagram	Defect. module indication
1	Beam Current protection	BC-PROT			Beam Current
2	H fail protection	HFB			Horizontal Flyback
3	SAA4978	PICNIC	7709	B3	Feature Box
4	Supply 5V	5V2			+5V Supply
5	Supply 5V	8V6			+8V Supply
6	Slow I2C-bus blocked				Slow I2C blocked
7	TDA9330	HOP video control/geometry	7301	B4	Video Controller
8	TDA9320	HIP I/O-video processing	7323	B2	Chroma IF IO
9	X-ray protection			A3	
10	ST24E32	NVM	7011	B5	Control
11	HOP protection				
12	Tuner protection	TUNER_prot			+8V (Tuner) Supply
13	UV1316	Tuner	U1200	A7	Tuner
14	MSP3451/3415	ITT sound processor + Dolby	7651	B6	Audio Module
15	Flash protection				
16	Featurebox protection	FBX_PROT			
17	SAA4956	DNR-memory	7714	B3	
18	SAA4990	PROZONIC	7708	B3	

CL96532156_034.eps
140100

Testpoint overview LSP panel

Large Signal panel (LSP) (copper side)

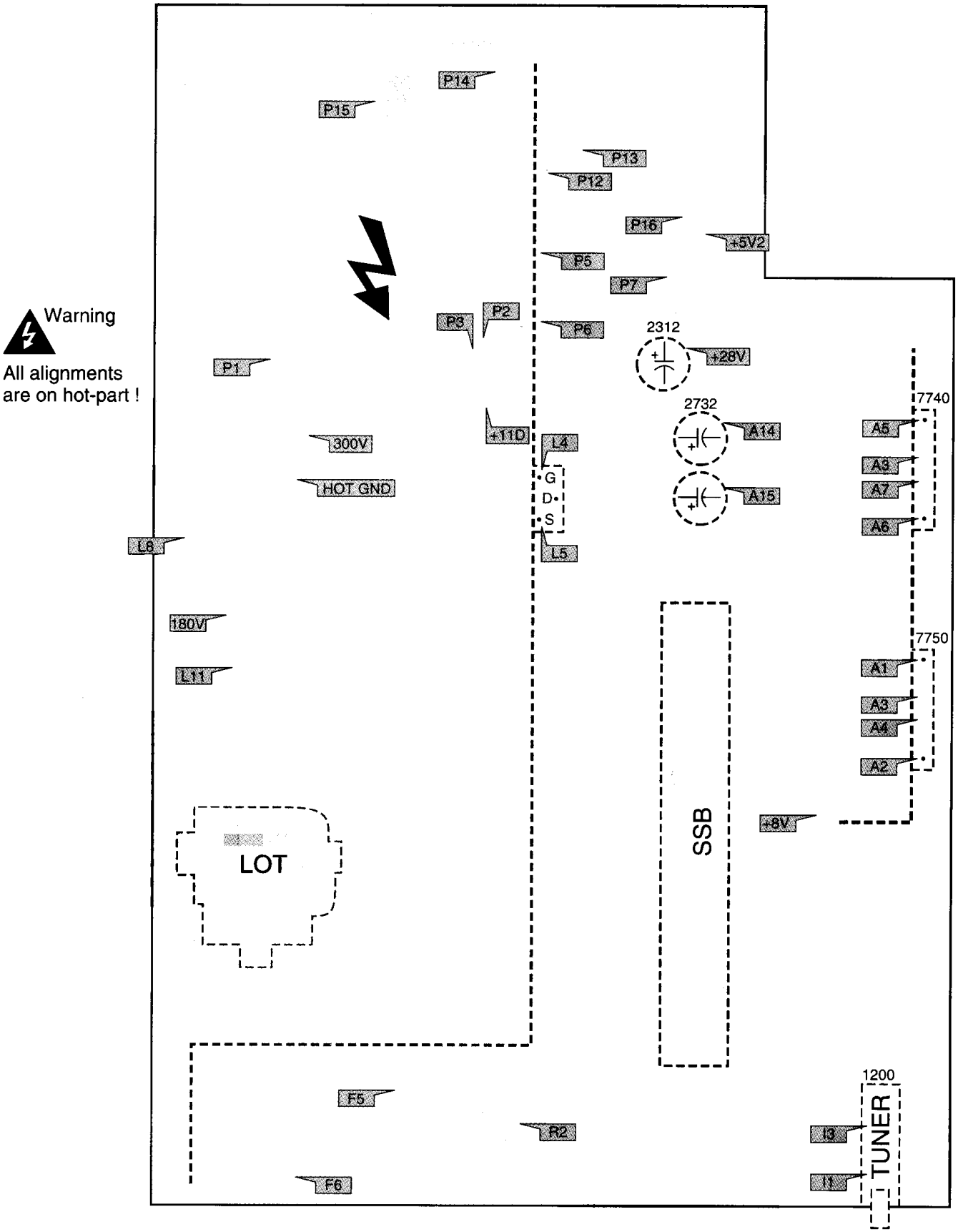

Testpoint overview CRT panel

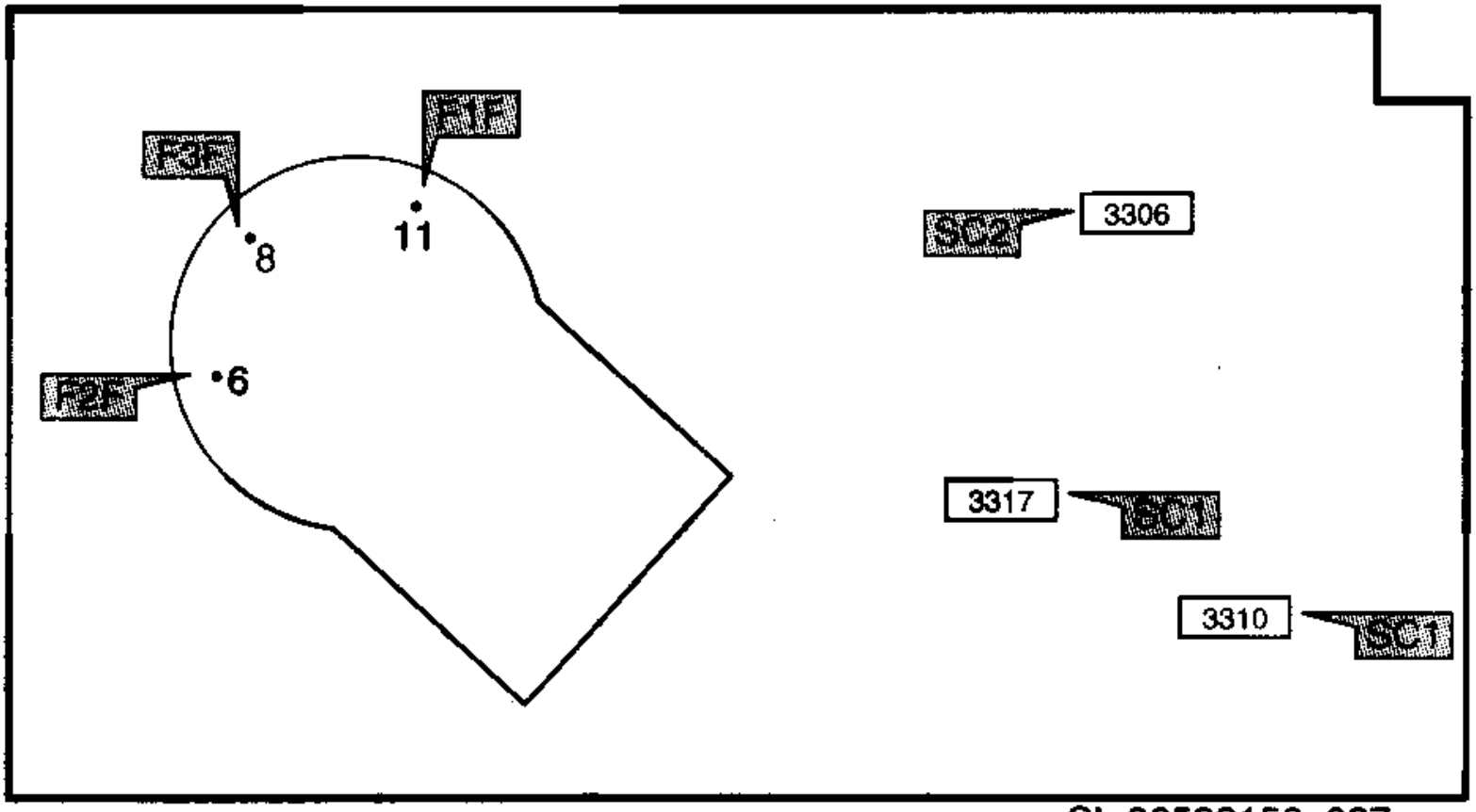

CL 96532156_087.eps
280200

7. Schematics and PWB's

Main supply

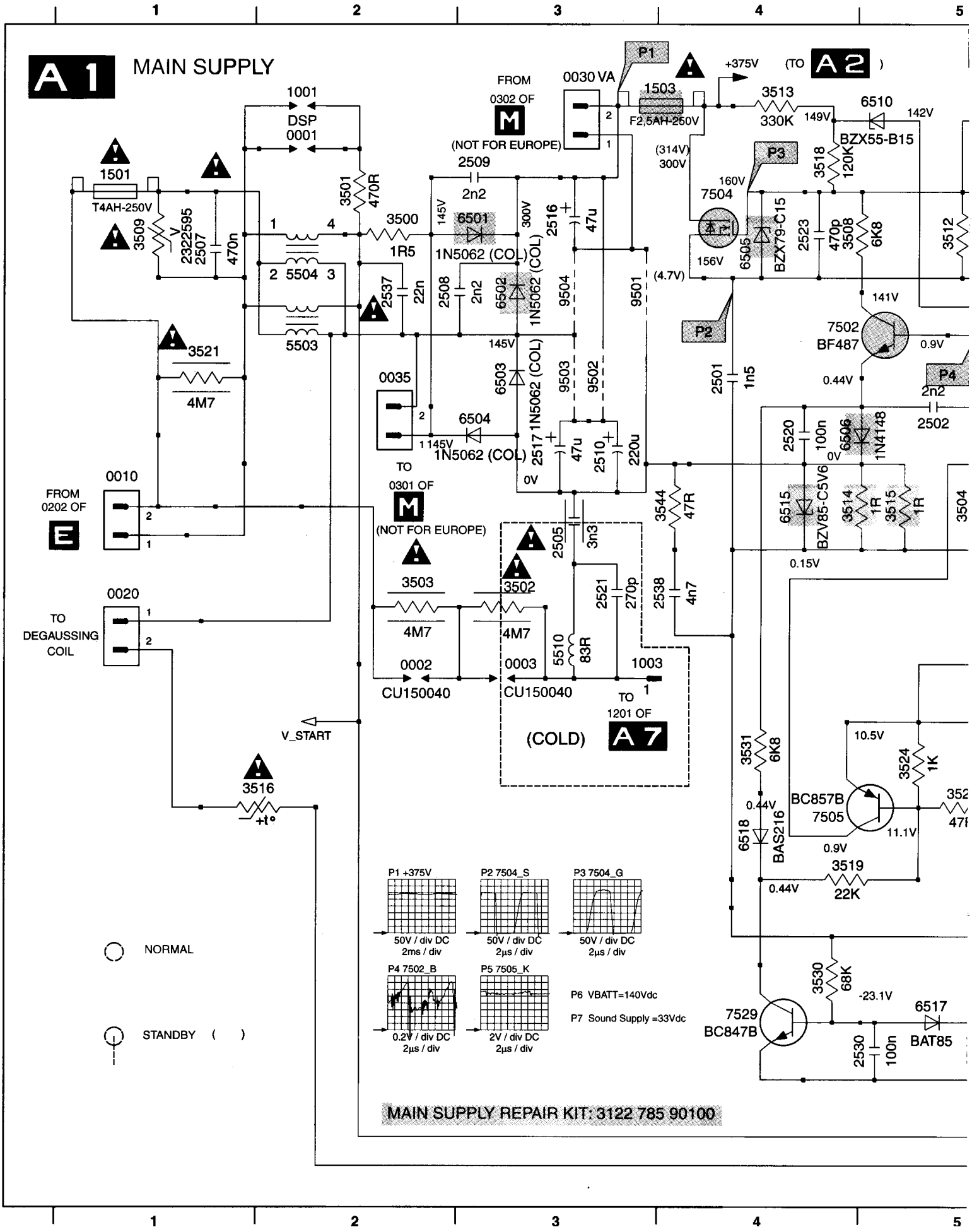

Diversity Large Signal Panel (A1)					
PosNr	29"	25"	28"	28" WS	32" WS
8000	CBLE DIP 2P/340mm	CBLE HR 3P/340mm	CBLE HR 3P/340mm	CBLE DIP 2P/340mm	CBLE DIP 2P/340mm

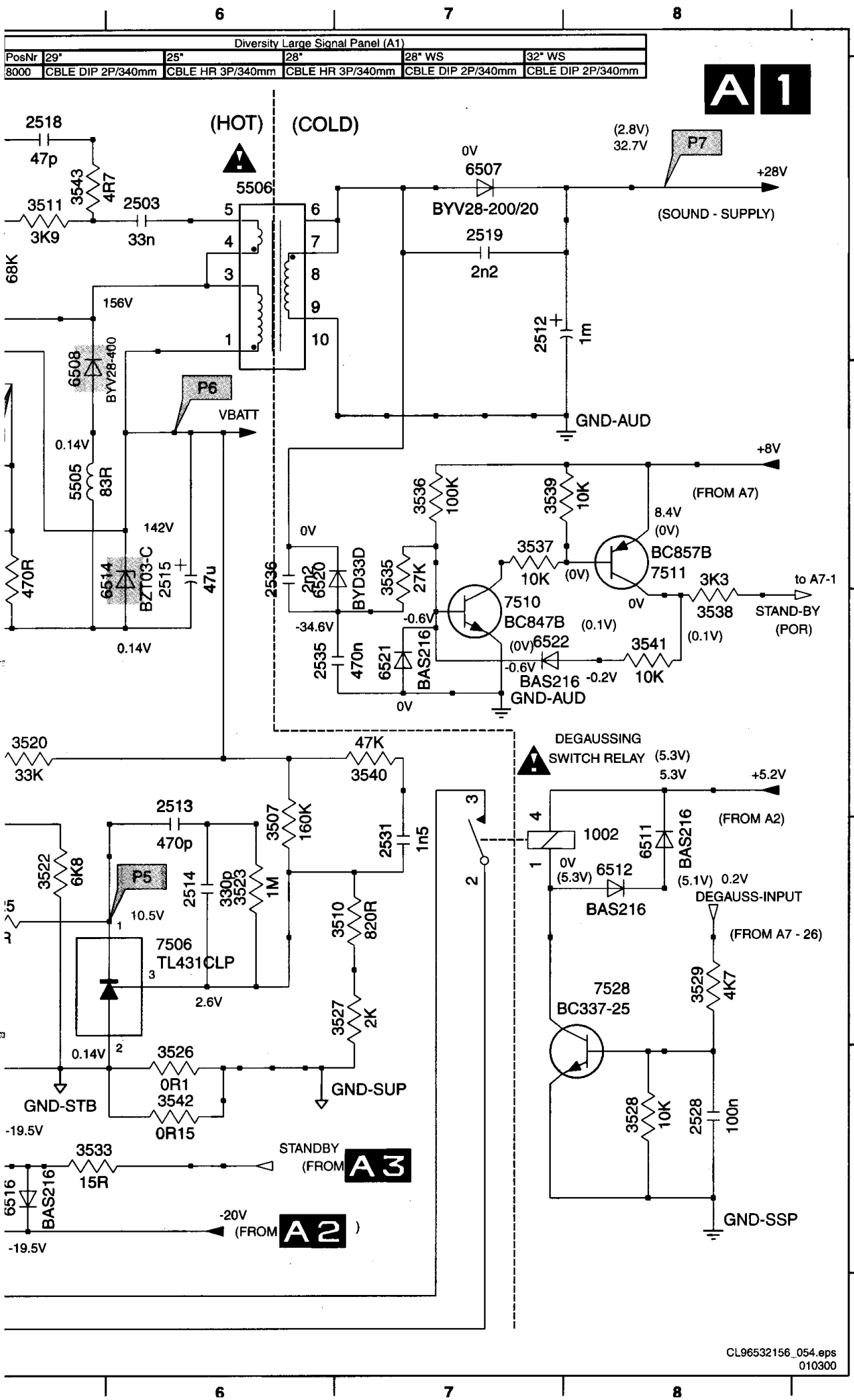

0001 A2
0002 C2
0003 C3
0010 B1
0020 C1
0030 A3
0035 B2
1001 A2
1002 D8
1003 C4
1501 A1
1503 A4
2501 B4
2502 B5
2503 A6
2505 C3
2507 A1
2508 A2
2509 A3
2510 B3
2512 A7
2513 C6
2514 D6
2515 B6
2516 A3
2517 B3
2518 A5
2519 A7
2520 B4
2521 C3
2523 A4
2528 E8
2530 E5
2531 D7
2535 C6
2536 B6
2537 A2
2538 C4
3500 A2
3501 A2
3502 C3
3503 C2
3504 B5
3507 D6
3508 A4
3509 A1
3510 D7
3511 A5
3512 A5
3513 A4
3514 B4
3515 B5
3516 D2
3518 A4
3519 D4
3520 C5
3521 B1
3522 D5
3523 D6
3524 D5
3525 D5
3526 E6
3527 D7
3528 E8
3529 D8
3530 E4
3531 D4
3533 E5
3535 B7
3536 B7
3537 B7
3538 C8
3539 B7
3540 C7
3541 C8
3542 E6
3543 A5
3544 B4
5503 B2
5504 A2
5505 B5
5506 A6
5510 C3
6501 A3
6502 A3
6503 B3
6504 B3
6505 A4
6506 B4
6507 A7
6508 B5
6510 A5
6511 D8
6512 D8
6514 B6
6515 B4
6516 E5
6517 E5
6518 D4
6520 B6
6521 C7
6522 C7
7502 B5
7504 A4
7505 D4
7506 D6
7510 C7
7511 B8
7528 D8
7529 E4
9501 A3
9502 B3
9503 B3
9504 A3

Standby supply

0045 C7	2107 B6	3101 B2	3108 C4	3123 D6	5101 B5	6103 A2	6120 D6	7104 D4
2101 B2	2108 A4	3102 C2	3110 A3	3124 D5	5102 B1	6105 C3	6121 D6	9001 A3
2102 C1	2109 D7	3103 B2	3113 C6	3125 D2	5103 B6	6106 C3	6122 D6	9110 D7
2103 B2	2110 C3	3104 B3	3114 D5	3126 D2	5104 B4	6107 B6	7100 D2	
2104 B7	2111 C3	3105 B2	3117 B2	3127 D2	5105 C4	6108 C3	7101 C4	
2105 B2	2113 A6	3106 C1	3118 C4	4102 D4	5110 D7	6109 B2	7102 B4	
2106 C5	2114 B3	3107 D1	3120 A1	4103 D4	5115 A7	6111 A6	7103 D5	

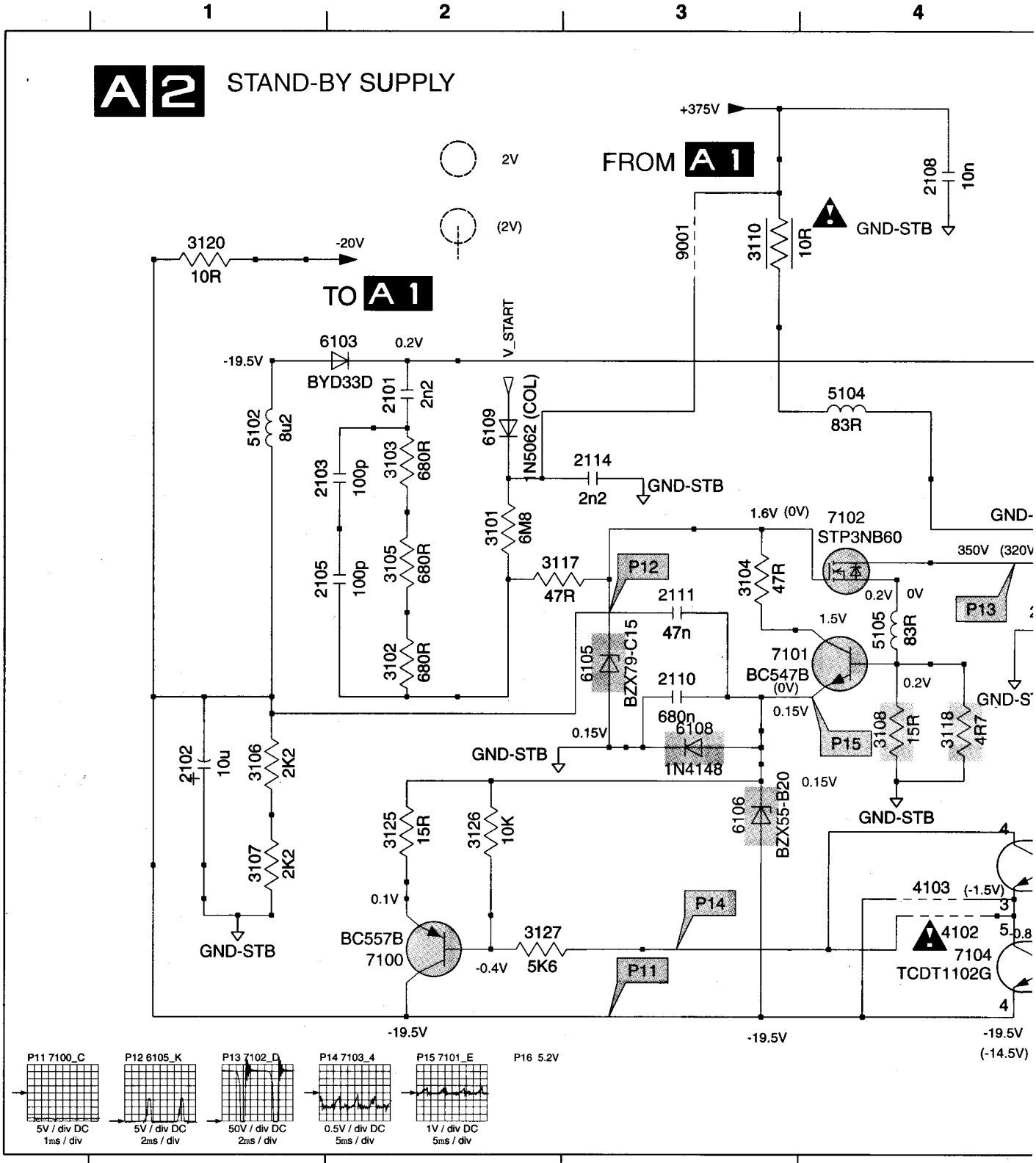

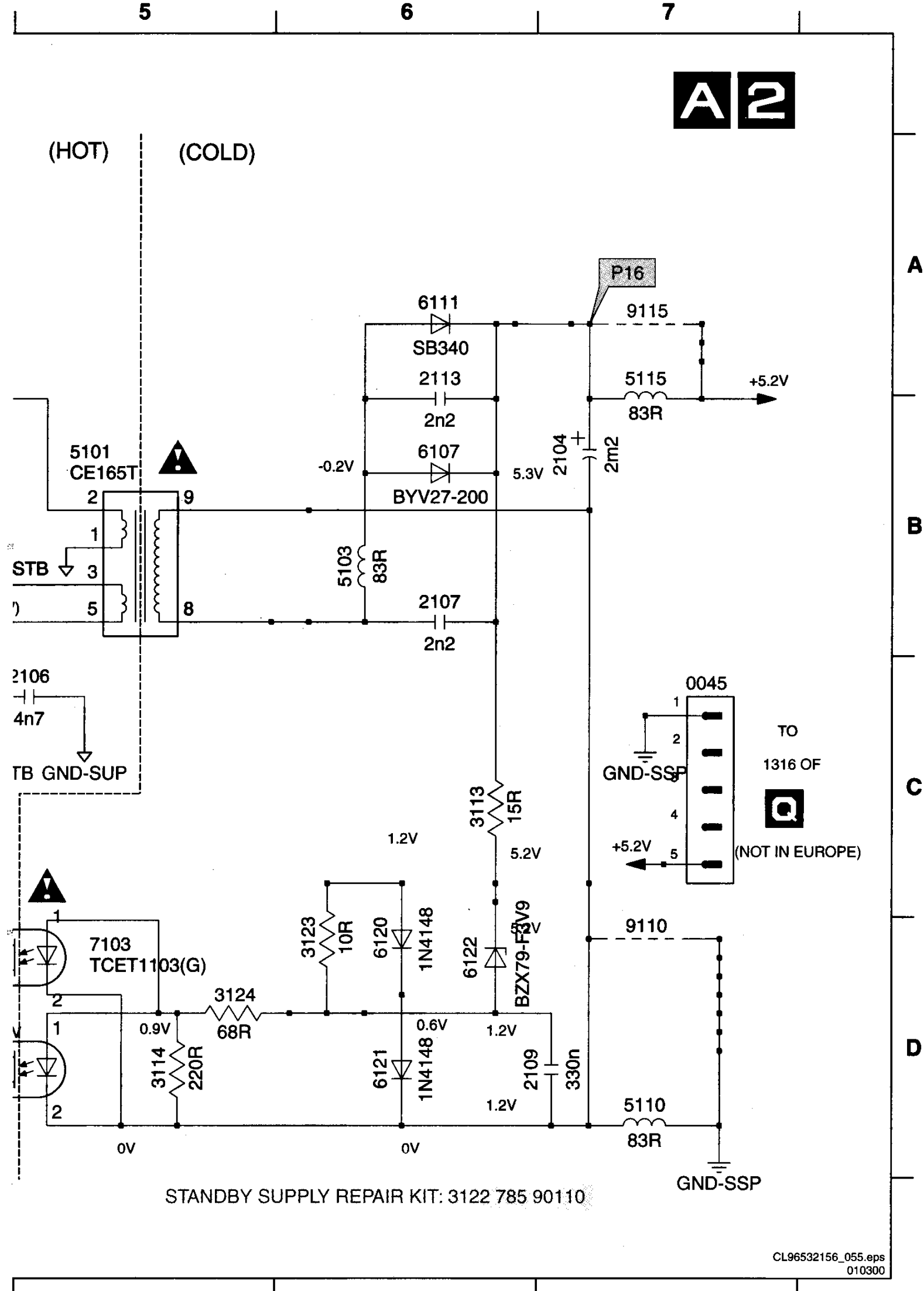
A2
(HOT)
(COLD)
P16
6111
SB340
9115
2113
2n2
5115
83R
+5.2V
5101
CE165T
-0.2V
6107
BYV27-200
5.3V
2104
2m2
STB
5103
83R
2107
2n2
2106
4n7
TB GND-SUP
0045
GND-SSP
TO
1316 OF
(NOT IN EUROPE)
3113
15R
1.2V
5.2V
+5.2V
7103
TCET1103(G)
3123
10R
6120
1N4148
6122
BZX79-F3V9
9110
3124
68R
0.9V
0.6V
1.2V
3114
220R
6121
1N4148
2109
330n
5110
83R
0V
0V
GND-SSP
STANDBY SUPPLY REPAIR KIT: 3122 785 90110
CL96532156_055.eps
010300

Line deflection

2400 A7	2421 F6	2450 C9	2469 D10	3406 E1	3426 C5	3468 D9	3491 D6	5423 B5	5467 E5	6465 B10	7482 G3
2401 C7	2422 F6	2455 C10	2480 E6	3407 E2	3431 E7	3469 E10	3495 E4	5424 F7	6406 E1	6466 F10	7483 F3
2409 E2	2423 F5	2459 E10	2488 A5	3409 B3	3450 C9	3475 F9	3499 G5	5425 C5	6407 C2	6468 D10	9401 D7
2412 D2	2425 B5	2460 D11	2489 G7	3410 A2	3451 C9	3481 E6	4417 C3	5426 A4	6408 B2	6480 D4	9408 B3
2413 D2	2426 B5	2461 D10	2490 F10	3411 C2	3460 D10	3483 F3	4482 G3	5430 C8	6421 A5	6481 E6	9423 B5
2414 D3	2429 D4	2462 A10	2491 D6	3414 E2	3461 E10	3484 F2	4483 F3	5460 E9	6422 B5	6482 F2	9425 C5

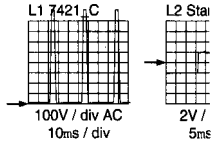

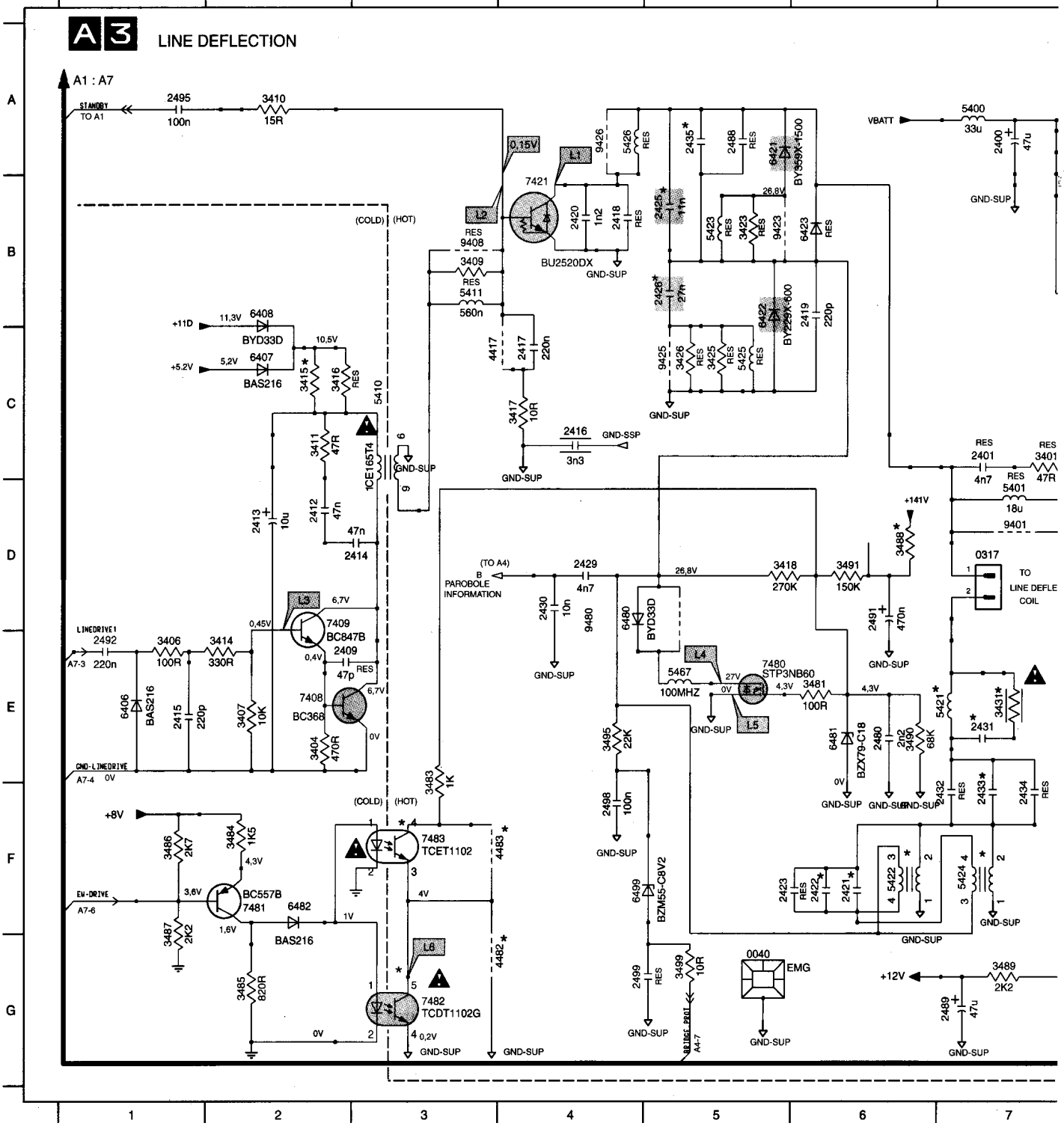

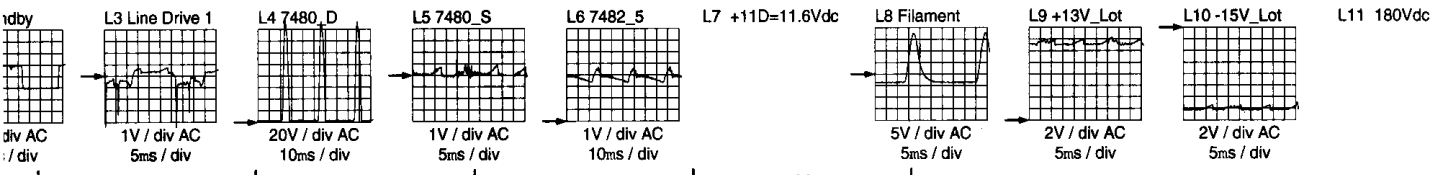

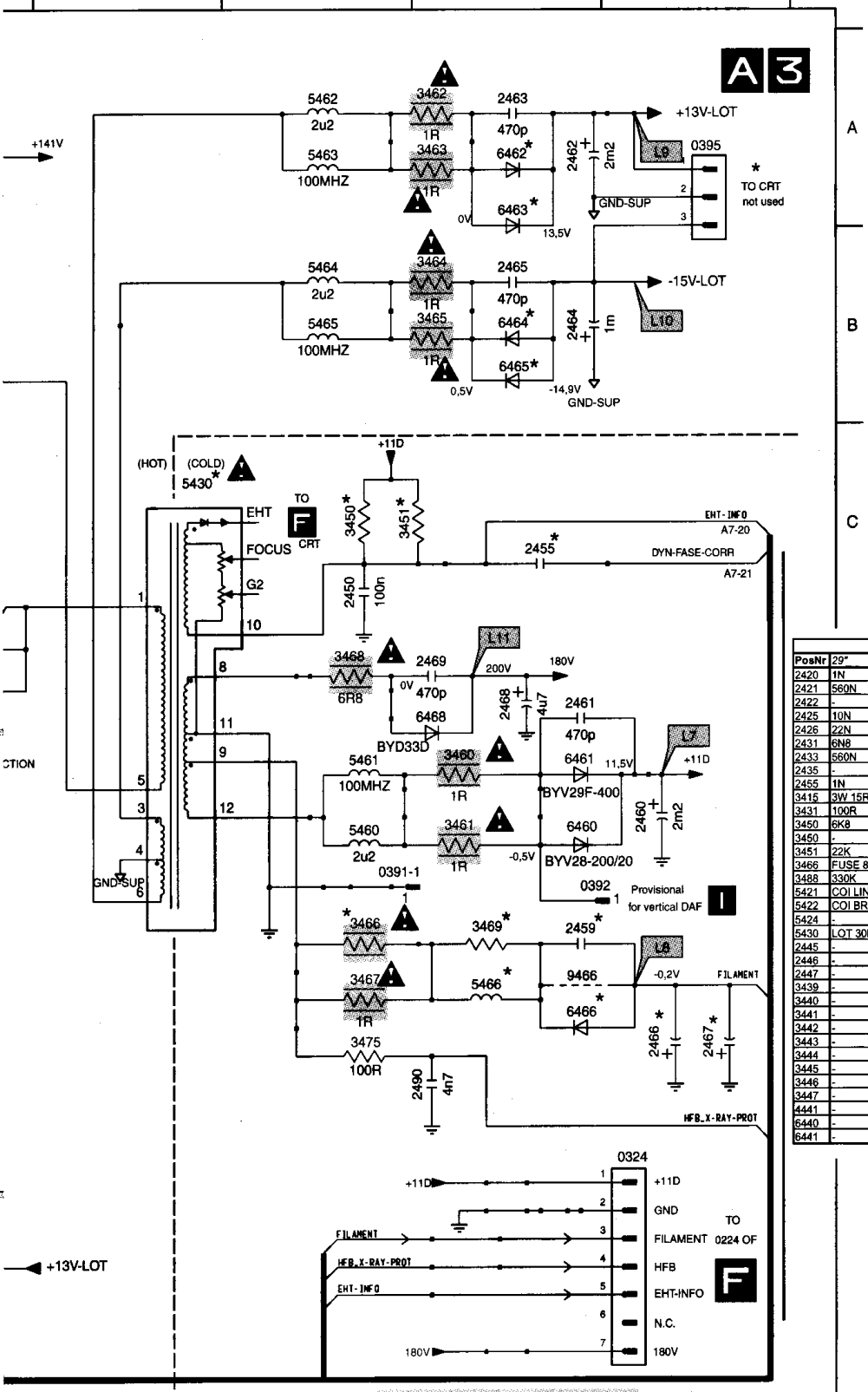

Diversity Large Signal Panel (A3)					
PosNr	29"	25"	28"	28" WS	32" WS
2420	1N	1N	1N	560P	1N
2421	560N	560N	470N	-	-
2422	-	-	-	21U2	21U2
2425	10N	9N1	-	11N	11N
2426	22N	24N	24N	24N	24N
2431	6N8	3N3	3N3	3N3	3N3
2433	560N	390N	470N	390N	430N
2435	-	-	9N1	-	-
2455	1N	-	-	3N3	3N3
3415	3W 15R	3W 15R	3W 15R	PR03 12R	PR03 12R
3431	100R	220R	220R	220R	220R
3450	6K8	-	-	10K	10K
3450	-	8K2	8K2	-	-
3451	22K	22K	22K	10K	10K
3466	FUSE 8R2	6R8	FUSE 8R2	1R	1R
3488	330K	220K	220K	220K	120K
5421	COI LINCOR DRUM	COI LINCOR DC12 8MH	COI LINCOR DRUM	COI LINCOR DRUM	COI LINCOR DRUM
5422	COI BRIDGE	-	-	COI BRIDGE	COI BRIDGE
5424	-	COI BRIDGE	COI BRIDGE	-	-
5430	LOT 30KV ISO ELDOR	LOT PWRSL. 27K5	LOT PWRSL. 27K5	LOT PWRSL. 30KV	LOT PWRSL. 30KV
2445	-	-	-	-	1U
2446	-	-	-	-	470P
2447	-	-	-	-	470P
3439	-	-	-	-	100R
3440	-	-	-	-	22K
3441	-	-	-	-	470K
3442	-	-	-	-	470K
3443	-	-	-	-	100R
3444	-	-	-	-	39K
3445	-	-	-	-	2K2
3446	-	-	-	-	2K2
3447	-	-	-	-	22R
4441	-	-	-	-	JUMP
6440	-	-	-	-	SMAS216
6441	-	-	-	-	SMAS216

MAIN LINE REPAIR KIT: 3122 785 90120

CL96532156_056.eps
010300

Frame deflection

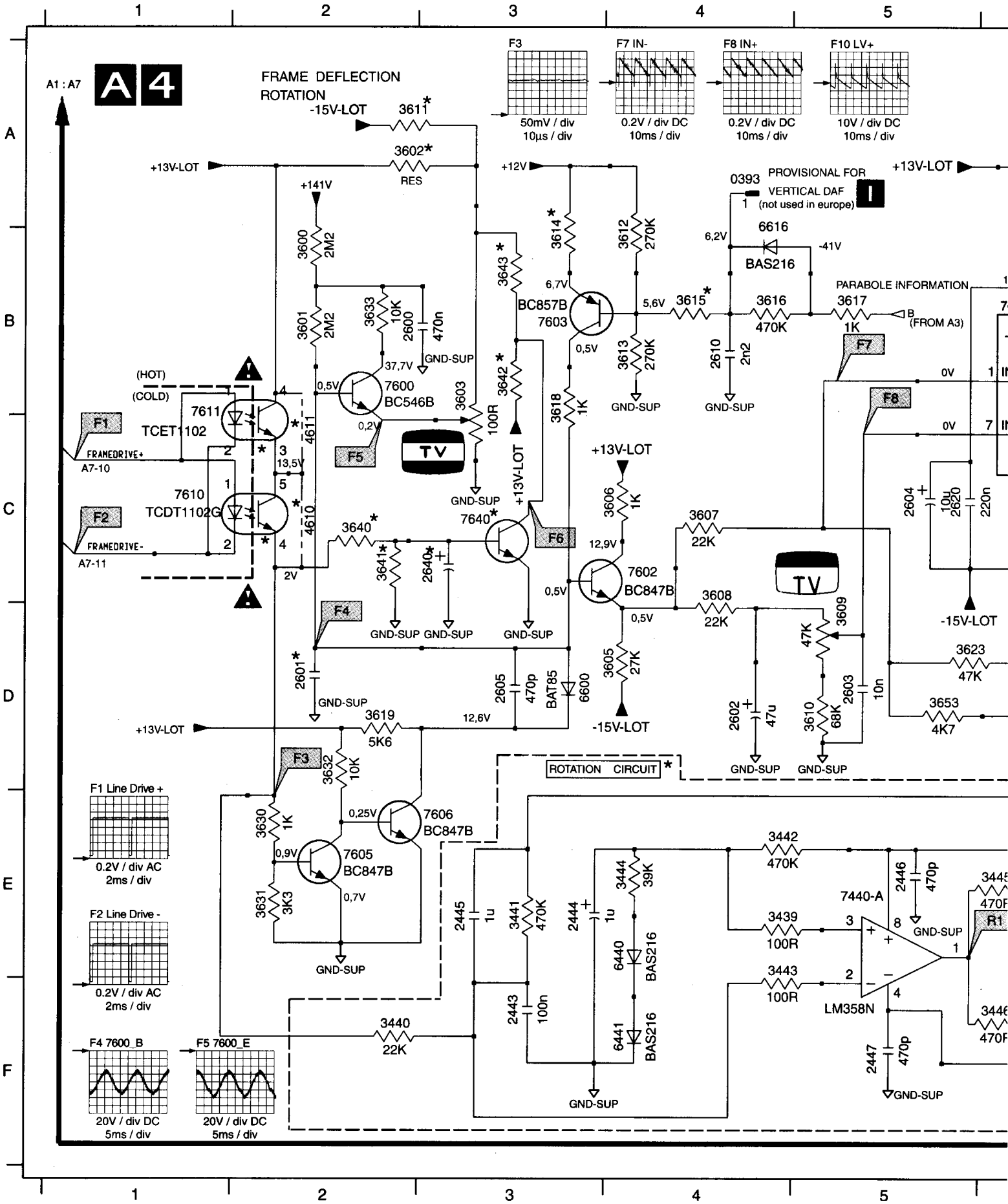

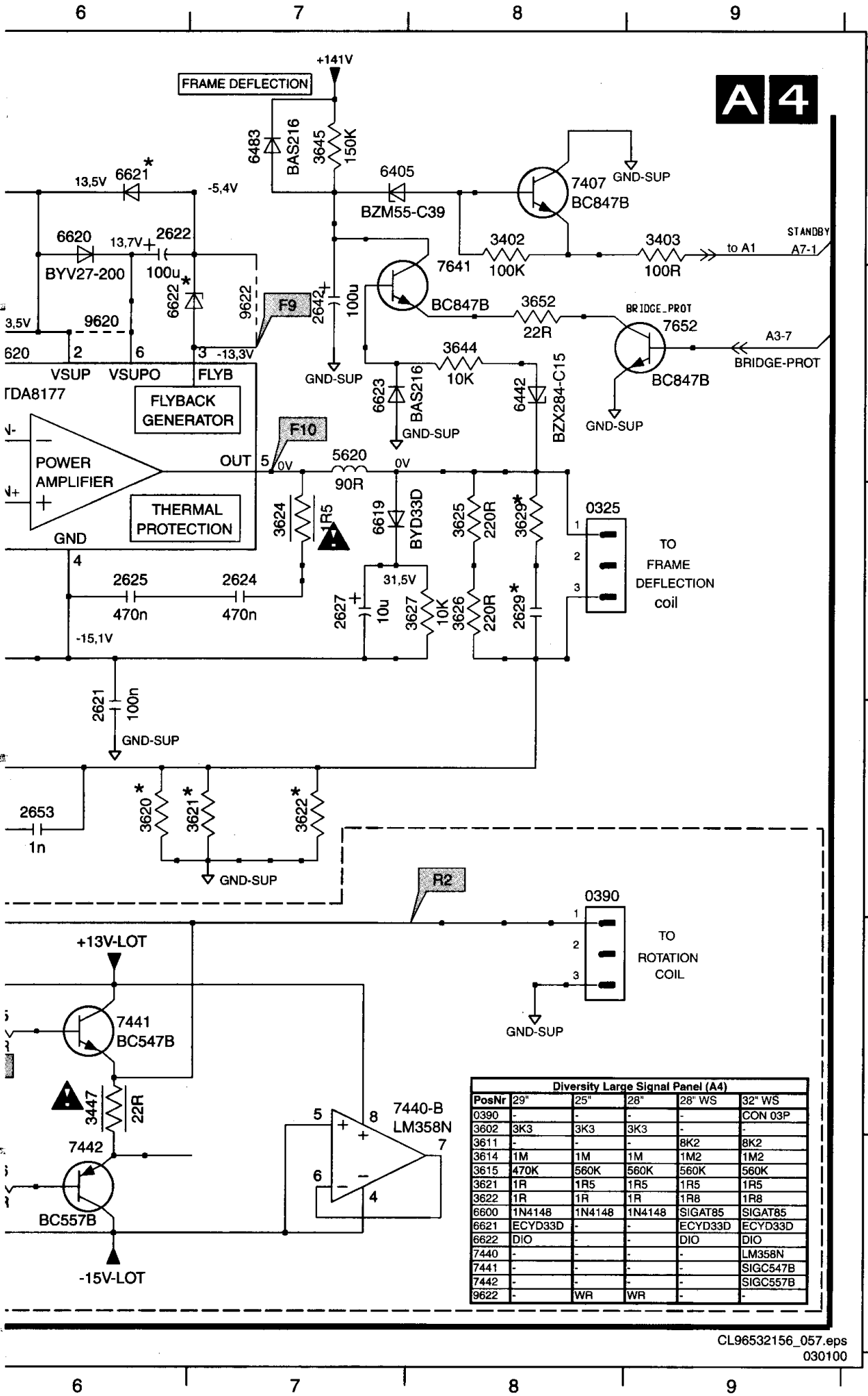

Diversity Large Signal Panel (A4)					
PosNr	29"	25"	28"	28" WS	32" WS
0390	-	-	-	-	CON 03P
3602	3K3	3K3	3K3	-	-
3611	-	-	-	8K2	8K2
3614	1M	1M	1M	1M2	1M2
3615	470K	560K	560K	560K	560K
3621	1R	1R5	1R5	1R5	1R5
3622	1R	1R	1R	1R8	1R8
6600	1N4148	1N4148	1N4148	SIGAT85	SIGAT85
6621	ECYD33D	-	-	ECYD33D	ECYD33D
6622	DIO	-	-	DIO	DIO
7440	-	-	-	-	LM358N
7441	-	-	-	-	SIGC547B
7442	-	-	-	-	SIGC557B
9622	-	WR	WR	-	-

A
0325 C8
0390 D8
0393 A4
2443 F3
2444 E3
2445 E3
2446 E5
2447 F5
2600 B2
2601 D2
2602 D4
2603 D5
2604 C5
2605 D3
2610 B4
2620 C5
2621 D6
2622 A6
2624 C7
2625 C6
2627 C7
2629 C8
2640 C3
2642 B7
2653 D6
3402 A8
3403 A9
3439 E4
3440 F2
3441 E3
3442 E4
3443 E4
3444 E4
3445 E6
3446 F6
3447 E6
3600 B2
3601 B2
3602 A2
3603 B3
3605 D4
3606 C4
3607 C4
3608 C4
3609 D5
3610 D5
3611 A2
3612 B4
3613 B4
3614 B3
3615 B4
3616 B4
3617 B5
3618 B3
3619 D2
3620 D6
3621 D7
3622 D7
3623 D5
3624 C7
3625 C8
3626 C8
3627 C8
3629 C8
3630 E2
3631 E2
3632 D2
3633 B2
3640 C2
3641 C2
3642 B3
3643 B3
3644 B8
3645 A7
3652 B8
3653 D5
4610 C2
4611 C2
5620 B7
6405 A7
6440 E4
6441 F4
6442 B8
6483 A7
6600 D3
6616 B4
6619 C7
6620 A6
6621 A6
6622 B6
6623 B7
7407 A8
7440-A E5
7440-B E7
7441 E6
7442 F6
7600 B2
7602 C4
7603 B3
7605 E2
7606 E3
7610 C1
7611 C1
7620 B6
7640 C3
7641 B8
7652 B9
9620 B6

Audio amplifier

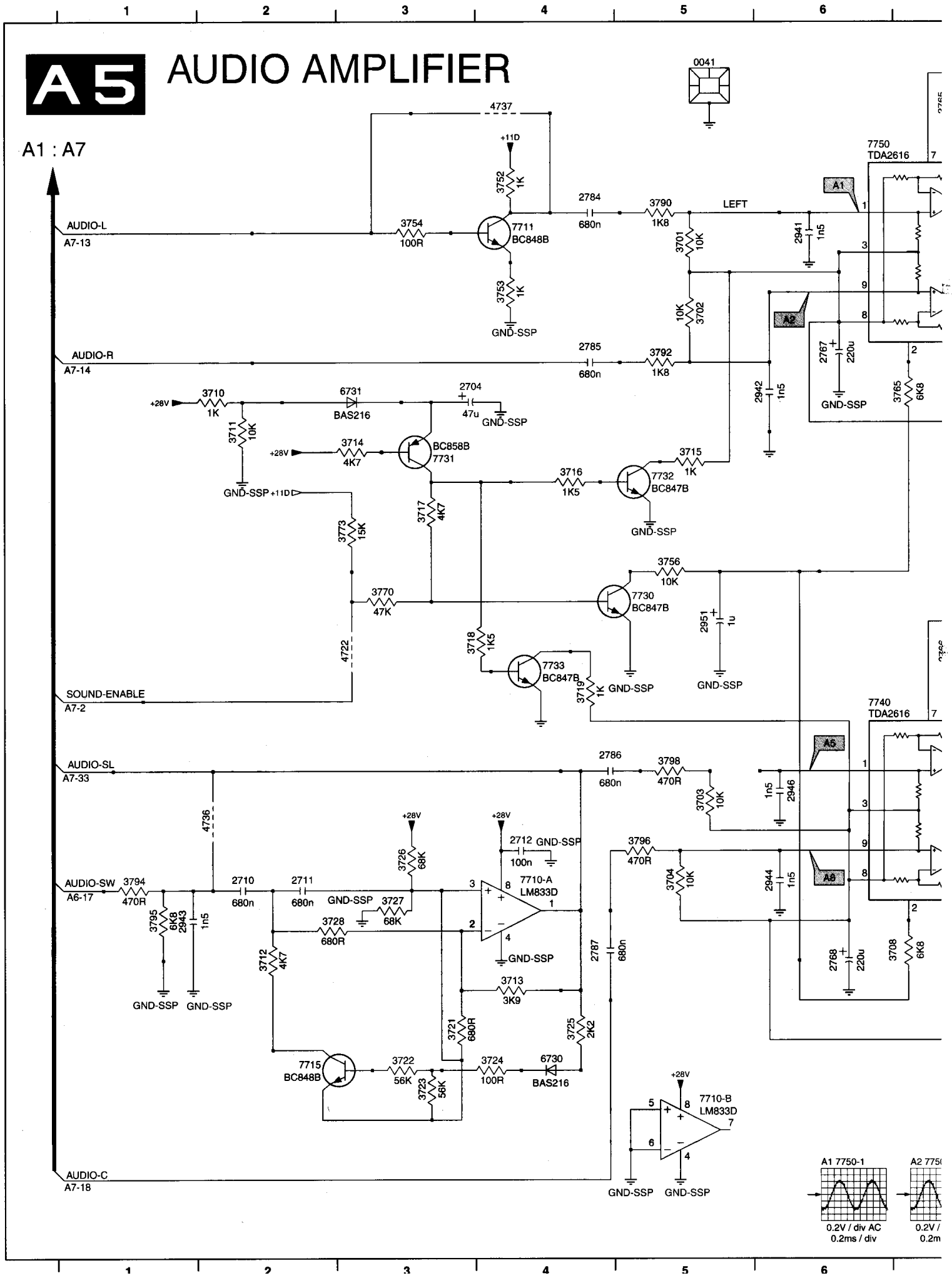

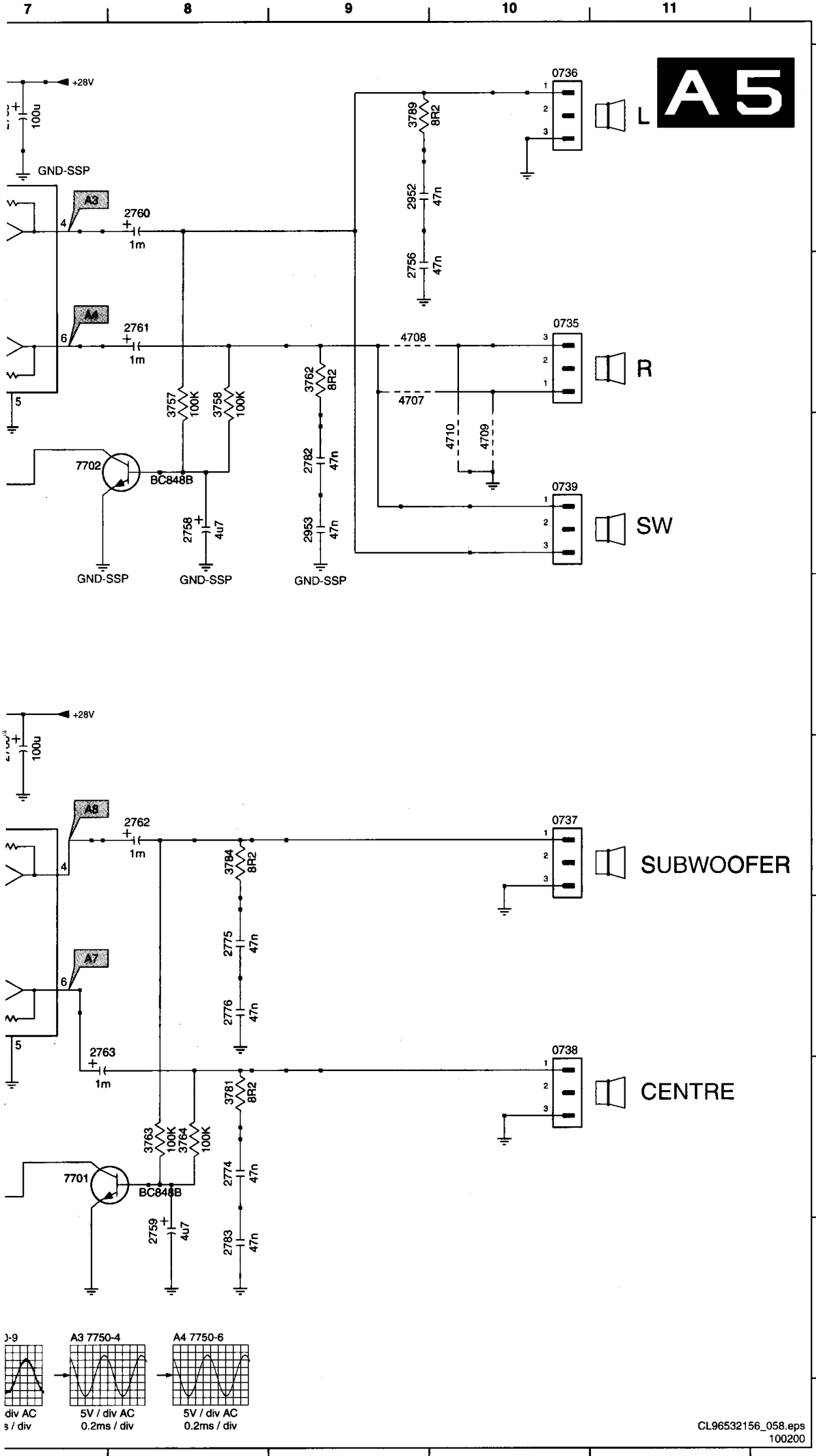

0041 A5
0735 B10
0736 A10
0737 E10
0738 F10
0739 C10
2704 C3
2710 F2
2711 F2
2712 F4
2756 B9
2758 C8
2759 H8
2760 A8
2761 B8
2762 E8
2763 F7
2765 A7
2766 E7
2767 B6
2768 G6
2774 G8
2775 F8
2776 F8
2782 C9
2783 H8
2784 A4
2785 B4
2786 E4
2787 G4
2941 B6
2942 C6
2943 G1
2944 F6
2946 F6
2951 D5
2952 A9
2953 C9
3701 B5
3702 B5
3703 F5
3704 F5
3708 G7
3710 C2
3711 C2
3712 G2
3713 G4
3714 C3
3715 C5
3716 C4
3717 D3
3718 E3
3719 E4
3721 G3
3722 H3
3723 H3
3724 H4
3725 G4
3726 F3
3727 F3
3728 G2
3752 A4
3753 B4
3754 B3
3756 D5
3757 B8
3758 B8
3762 B9
3763 G8
3764 G8
3765 C7
3770 D3
3773 D3
3781 G8
3784 E8
3789 A9
3790 A5
3792 B5
3794 F1
3795 G1
3796 F5
3798 E5
4707 B9
4708 B9
4709 C10
4710 C10
4722 E3
4736 F2
4737 A4
6730 H4
6731 C3
7701 G7
7702 C7
7710-A F4
7710-B H5
7711 B4
7715 H2
7730 D5
7731 C3
7732 C5
7733 E4
7740 E6
7750 A6

Headphone amplifier

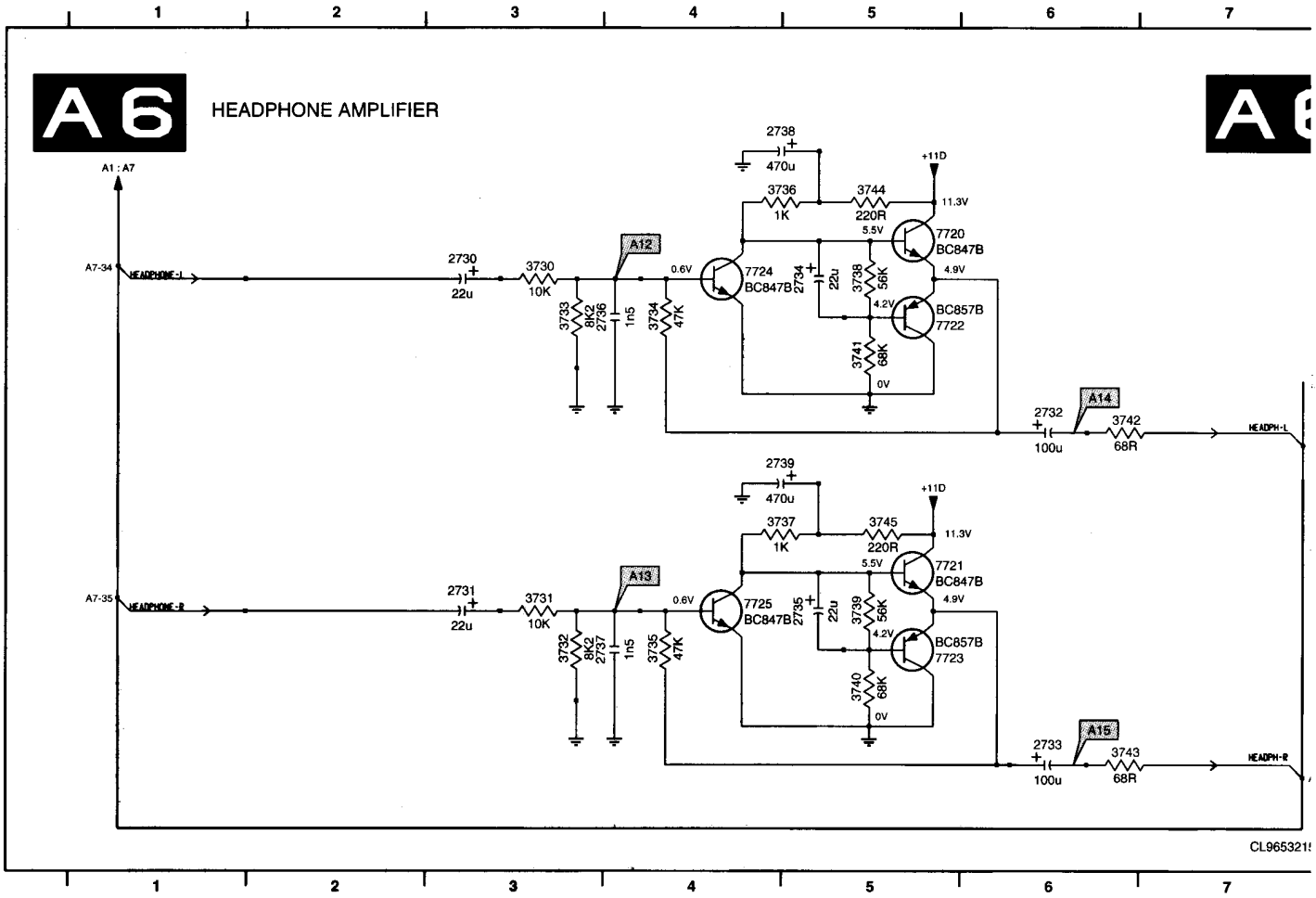

Front

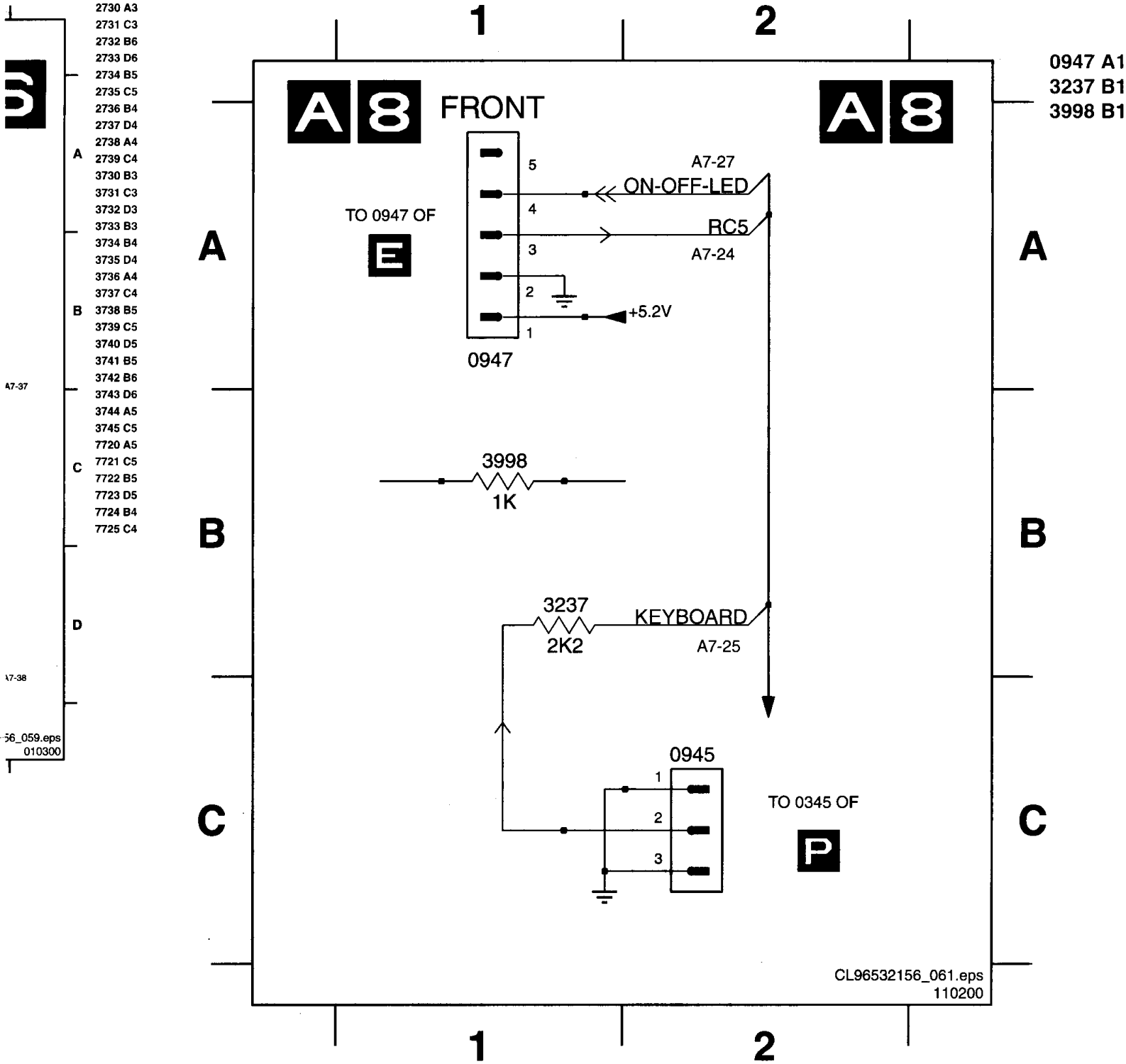
2730 A3
2731 C3
2732 B6
2733 D6
2734 B5
2735 C5
2736 B4
2737 D4
2738 A4
2739 C4
3730 B3
3731 C3
3732 D3
3733 B3
3734 B4
3735 D4
3736 A4
3737 C4
3738 B5
3739 C5
3740 D5
3741 B5
3742 B6
3743 D6
3744 A5
3745 C5
7720 A5
7721 C5
7722 B5
7723 D5
7724 B4
7725 C4
A7-37
A7-38
56_059.eps
010300
1
2
A8 FRONT
A8
0947 A1
3237 B1
3998 B1
A7-27
ON-OFF-LED
TO 0947 OF
E
RC5
A7-24
+5.2V
0947
3998
1K
3237
2K2
KEYBOARD
A7-25
0945
TO 0345 OF
P
CL96532156_061.eps
110200

Tuner, I/O, Simm connector (female)

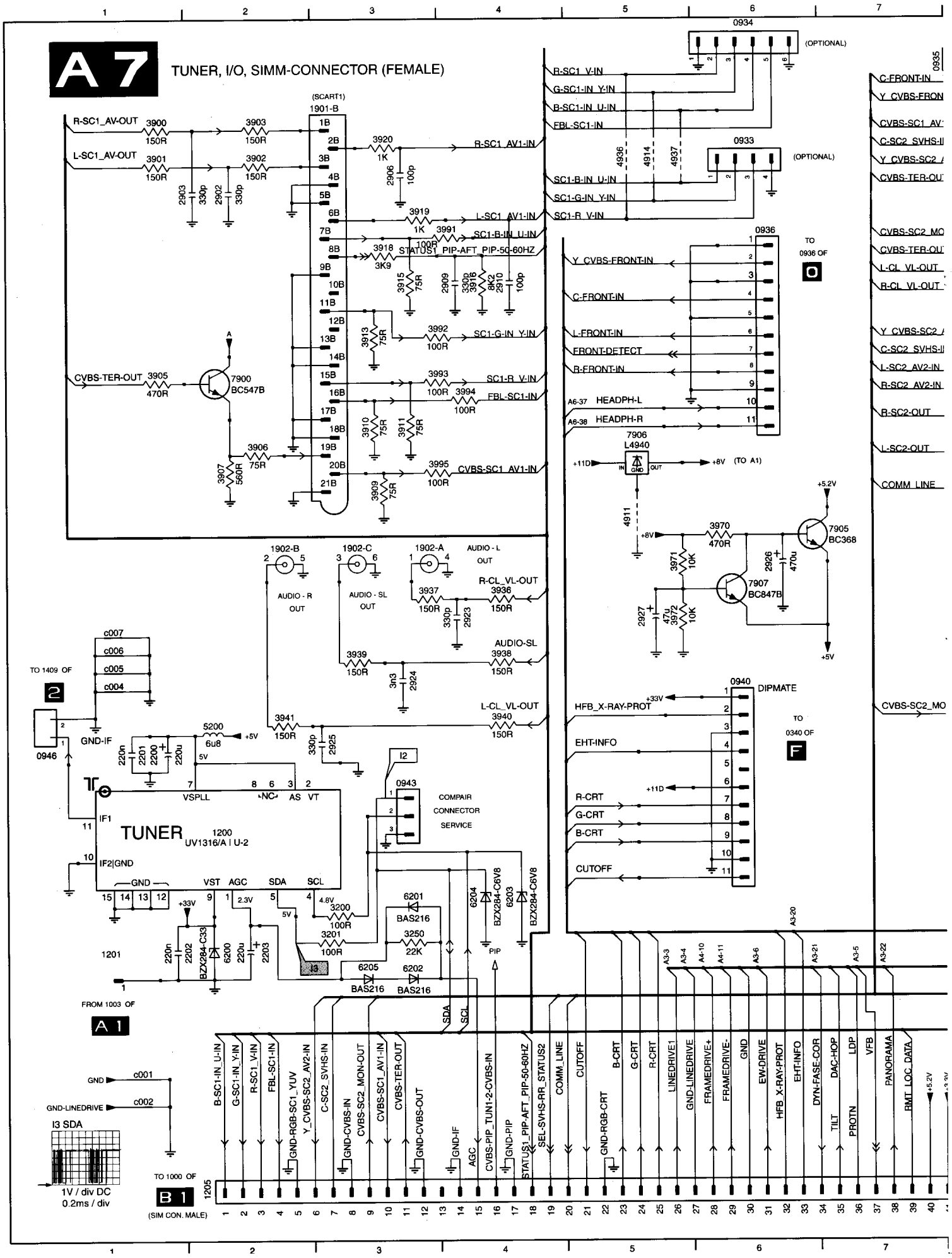

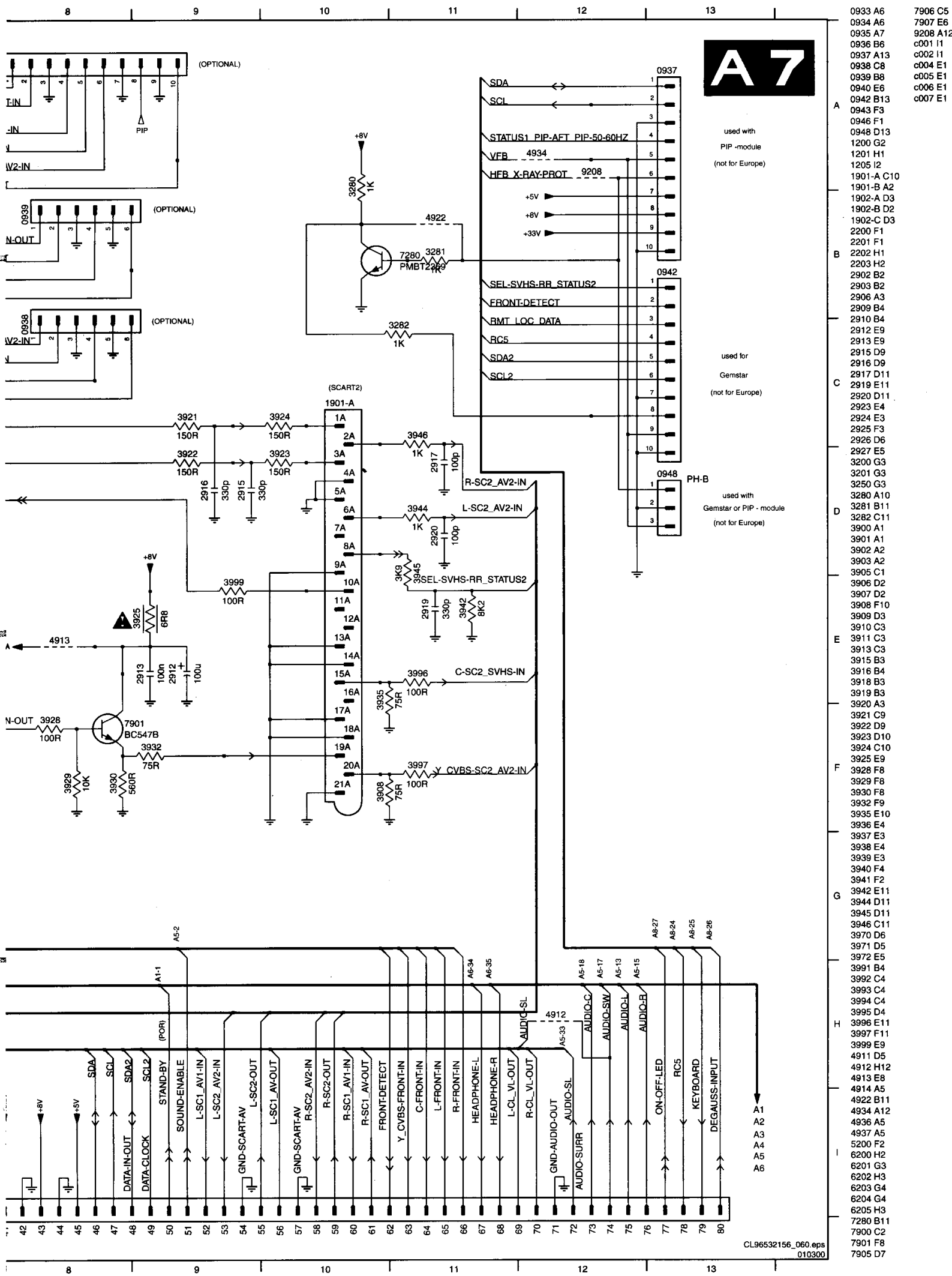

0933 A6
0934 A6
0935 A7
0936 B6
0937 A13
0938 C8
0939 B8
0940 E6
0942 B13
0943 F3
0946 F1
0948 D13
1200 G2
1201 H1
1205 I2
1901-A C10
1901-B A2
1902-A D3
1902-B D2
1902-C D3
2200 F1
2201 F1
2202 H1
2203 H2
2902 B2
2903 B2
2906 A3
2909 B4
2910 B4
2912 E9
2913 E9
2915 D9
2916 D9
2917 D11
2919 E11
2920 D11
2923 E4
2924 E3
2925 F3
2926 D6
2927 E5
3200 G3
3201 G3
3250 G3
3280 A10
3281 B11
3282 C11
3900 A1
3901 A1
3902 A2
3903 A2
3905 C1
3906 D2
3907 D2
3908 F10
3909 D3
3910 C3
3911 C3
3913 C3
3915 B3
3916 B4
3918 B3
3919 B3
3920 A3
3921 C9
3922 D9
3923 D10
3924 C10
3925 E9
3928 F8
3929 F8
3930 F8
3932 F9
3935 E10
3936 E4
3937 E3
3938 E4
3939 E3
3940 F4
3941 F2
3942 E11
3944 D11
3945 D11
3946 C11
3970 D6
3971 D5
3972 E5
3991 B4
3992 C4
3993 C4
3994 C4
3995 D4
3996 E11
3997 F11
3999 E9
4911 D5
4912 H12
4913 E8
4914 A5
4922 B11
4934 A12
4936 A5
4937 A5
5200 F2
6200 H2
6201 G3
6202 H3
6203 G4
6204 G4
6205 H3
7280 B11
7900 C2
7901 F8
7905 D7
7906 C5
7907 E6
9208 A12
c001 I1
c002 I1
c004 E1
c005 E1
c006 E1
c007 E1

LSP (copper side overview)

Part 1

CL96532156_083.pdf
180200

Part 3

CL96532156_085.pdf
180200

0010 A9	2467 A5	2920 E1	3510 D6	3735 E5	4521 D7
0020 C8	2468 A5	2923 F1	3511 D7	3736 D5	4522 D7
0030 A7	2469 A4	2924 F1	3512 C7	3737 E5	4610 D1
0035 A7	2480 C6	2925 F1	3513 B7	3738 D5	4611 D1
0040 D5	2488 C4	2926 E3	3514 C7	3739 E5	4701 F5
0041 G5	2489 C1	2927 F3	3515 B6	3740 E5	4702 G5
0045 F7	2490 A6	2941 G4	3516 C8	3741 D5	4707 F5
0317 B4	2491 D2	2942 G4	3518 C7	3742 F5	4708 F6
0324 A6	2492 D4	2943 F5	3519 C7	3743 E5	4709 F6
0325 A1	2495 D3	2944 G5	3520 C7	3744 D5	4710 F6
0390 D1	2498 B5	2946 G6	3521 A9	3745 E5	4722 F5
0391 A2	2499 C5	2951 G5	3522 C7	3752 F5	4723 G6
0392 A4	2501 C7	2952 F6	3523 D7	3753 F5	4724 F5
0393 C1	2502 C7	2953 F4	3524 C7	3754 F5	4736 F5
0395 B1	2503 D7	3101 C9	3525 C7	3756 G5	4737 F5
0735 F6	2505 A6	3102 D9	3526 B6	3757 F6	4910 E1
0736 F6	2507 B8	3103 D9	3527 D6	3758 F5	4911 F2
0737 F7	2508 A7	3104 C9	3528 E8	3762 F4	4912 E4
0738 F6	2509 A7	3105 D9	3529 E8	3763 G6	4913 F1
0739 F5	2510 B6	3106 E9	3530 D7	3764 F6	4914 E1
0933 F1	2512 E6	3107 D9	3531 C7	3765 G5	4916 G1
0934 E1	2513 D7	3108 C9	3533 D6	3770 F5	4917 F1
0935 F1	2514 D7	3110 C8	3535 E6	3773 F5	4919 E4
0936 E4	2515 C6	3113 E9	3536 E6	3781 F6	4920 E1
0937 G2	2516 B7	3114 E9	3537 E6	3784 F7	4922 G3
0938 F1	2517 A6	3117 D9	3538 E6	3789 F6	4923 E5
0939 F2	2518 C7	3118 C9	3539 E6	3790 G4	4924 E5
0940 E2	2519 E7	3120 E9	3540 D6	3792 G5	4925 E5
0942 G3	2520 C7	3123 E9	3541 E6	3794 F5	4926 F5
0943 G1	2521 A6	3124 E9	3542 B6	3795 F5	4927 F5
0945 E10	2523 C6	3125 C10	3543 C7	3796 F5	4928 F5
0946 G2	2528 E8	3126 C10	3544 B7	3798 G5	4929 G1
0947 A10	2530 D7	3127 C9	3600 C1	3900 D1	4932 E1
0948 G2	2531 D6	3200 G1	3601 C1	3901 D1	4934 G3
1001 A8	2535 E6	3201 G1	3602 B1	3902 D1	4935 E1
1002 D8	2536 E7	3237 E9	3603 B1	3903 D1	4936 E1
1003 A6	2537 A8	3250 G1	3605 A1	3905 E1	4937 E1
1200 G1	2538 B7	3280 G3	3606 B1	3906 E1	5101 E8
1201 F1	2600 C1	3281 G3	3607 A1	3907 E1	5102 D9
1205 E3	2601 C1	3282 G3	3608 A1	3908 F1	5103 E8
1501 B9	2602 B1	3401 B4	3609 A1	3909 F1	5104 D8
1503 B7	2603 A1	3402 D3	3610 A1	3910 E1	5105 C8
1901 E1	2604 A1	3403 D3	3611 B1	3911 E1	5110 E7
1902 F1	2605 C1	3404 D3	3612 B1	3913 E1	5115 E7
2101 D9	2610 B1	3406 D4	3613 B1	3915 E1	5200 G2
2102 D9	2620 A1	3407 D4	3614 B1	3916 E1	5400 A6
2103 D9	2621 A1	3409 C2	3615 B1	3918 E1	5401 B4
2104 E8	2622 A1	3410 D4	3616 B1	3919 E1	5410 D2
2105 C9	2624 A1	3411 D3	3617 C1	3920 D1	5411 C3
2106 C9	2625 A1	3414 D4	3618 B1	3921 D2	5421 B4
2107 E9	2627 A1	3415 D4	3619 C1	3922 E2	5422 C6
2108 C9	2629 A1	3416 D4	3620 B1	3923 D1	5423 C5
2109 E9	2640 B1	3417 C4	3621 B1	3924 D1	5424 C5
2110 C9	2642 C2	3418 C6	3622 B1	3925 F1	5425 C5
2111 C9	2653 A1	3423 C4	3623 A1	3928 F1	5426 C4
2113 E8	2704 G4	3425 C5	3624 A1	3929 F1	5430 B3
2114 B9	2710 F5	3426 C5	3625 A1	3930 F1	5460 A3
2200 F1	2711 F4	3431 B4	3626 A1	3932 F1	5461 A3
2201 G1	2712 F4	3439 C1	3627 B1	3935 F1	5462 C2
2202 G1	2730 D4	3440 C1	3629 A1	3936 F1	5463 C2
2203 G1	2731 E4	3441 C1	3630 D1	3937 F1	5464 C3
2400 B5	2732 E6	3442 C1	3631 D1	3938 F1	5465 C3
2401 B4	2733 E6	3443 C1	3632 C1	3939 F1	5466 A5
2409 D3	2734 D5	3444 D1	3633 C1	3940 F1	5467 C5
2412 D3	2735 E5	3445 C1	3640 B1	3941 F1	5503 B8
2413 D3	2736 E5	3446 C1	3641 B1	3942 E1	5504 B8
2414 D3	2737 E5	3447 C1	3642 B1	3944 E1	5505 C7
2415 D4	2738 D5	3450 A6	3643 B1	3945 E1	5506 D7
2416 D3	2739 E5	3451 A5	3644 A1	3946 D1	5510 A6
2417 D4	2756 F6	3460 A4	3645 C2	3970 F3	5620 A1
2418 C3	2758 F5	3461 A4	3652 C3	3971 F3	6103 D9
2419 C5	2759 G6	3462 C2	3653 A1	3972 F3	6105 D9
2420 C3	2760 F6	3463 C1	3701 G4	3991 E1	6106 C9
2421 B6	2761 F3	3464 C3	3702 G3	3992 E1	6107 E8
2422 B6	2762 G6	3465 C2	3703 G6	3993 E1	6108 B9
2423 B5	2763 G6	3466 A5	3704 G5	3994 E1	6109 B9
2425 C4	2765 G4	3467 A5	3708 G5	3995 E2	6111 E8
2426 C4	2766 F7	3468 A4	3710 G4	3996 E2	6120 E9
2429 C5	2767 G4	3469 A5	3711 G4	3997 E2	6121 E9
2430 C6	2768 G6	3475 A5	3712 F4	3998 E10	6122 E9
2431 B4	2774 F6	3481 D6	3713 F4	3999 F2	6200 G1
2432 B5	2775 F7	3483 D2	3714 G4	4102 E9	6201 G1
2433 B4	2776 F7	3484 D2	3715 G4	4103 E9	6202 G1
2434 B5	2782 F4	3485 D2	3716 G4	4401 C1	6203 G1
2435 C4	2783 F6	3486 D2	3717 G4	4402 C1	6204 G1
2443 C1	2784 G5	3487 D2	3718 G5	4403 A1	6205 G1
2444 D1	2785 G5	3488 D1	3719 G6	4404 C6	6405 C2
2445 D1	2786 G5	3489 B1	3721 F4	4405 D2	6406 D4
2446 C1	2787 F5	3490 D6	3722 F4	4406 A1	6407 D4
2447 C1	2902 D1	3491 D1	3723 F4	4407 A1	6408 D4
2450 A2	2903 D1	3495 C5	3724 F4	4408 B1	6421 D4
2455 D2	2906 D1	3499 C5	3725 F5	4409 C1	6422 D5
2459 A5	2909 E1	3500 A8	3726 F4	4417 D4	6423 C4
2460 A4	2910 E1	3501 A8	3727 F4	4418 C6	6440 D1
2461 A4	2912 F1	3502 A7	3728 F4	4441 D1	6441 D1
2462 C1	2913 F1	3503 A9	3730 D5	4442 D3	6442 A1
2463 C1	2915 D1	3504 C7	3731 E5	4443 D3	6460 A4
2464 C2	2916 D1	3507 D6	3732 E5	4444 D3	6461 A4
2465 C2	2917 D1	3508 C7	3733 E5	4482 D2	6462 C1
2466 A6	2919 E1	3509 B9	3734 E5	4483 D2	6463 C1

6464	C2	9202	F2	9929	F3
6465	C2	9203	F5	9930	E1
6466	A5	9204	F6	9931	G1
6468	A4	9205	F6	9932	E2
6480	C5	9206	F5	9933	E3
6481	D6	9207	E4	9934	F3
6482	D2	9208	G2	9935	F2
6483	C2	9209	E4	9936	E4
6499	C5	9210	G3	9943	E3
6501	A7	9211	G3	9944	E4
6502	A7	9212	G2	9945	E5
6503	A7	9213	E1	9946	F3
6504	A6	9214	E5	9947	E5
6505	C6	9215	E4	9948	D4
6506	C7	9216	F2	9950	D4
6507	E7	9217	E2	9951	D5
6508	C7	9218	E1	9952	D4
6510	B6	9220	E1	9957	F3
6511	D8	9221	G2	9958	E5
6512	D8	9222	F6	9960	E3
6514	D6	9223	F4	9961	F3
6515	B8	9224	F6	9962	F3
6516	D7	9225	D1	9963	F5
6517	D6	9226	F1	9964	F5
6518	C7	9227	F1	9965	F2
6520	E7	9228	F1	9966	F5
6521	E6	9229	G1	9967	D5
6522	E6	9230	E2	9968	D6
6600	C1	9231	E2	9969	F3
6616	B1	9401	B4	9970	F2
6619	A1	9402	B1	9971	F2
6620	A1	9403	B1	9972	G1
6621	A1	9404	B1	9976	D1
6622	A1	9408	C2	9980	E2
6623	B2	9412	C3	9981	F1
6730	G4	9414	C3	9982	F1
6731	G4	9418	B1	9983	F1
7100	C9	9421	C2	9984	F2
7101	C9	9423	C4	9985	G2
7102	D8	9424	D1	9987	F2
7103	E9	9425	C5	9988	F2
7104	E9	9426	C4	9989	E3
7280	G3	9428	C2	9990	E2
7407	D3	9429	C4	9991	F4
7408	D3	9430	C3	9992	F4
7409	D4	9431	A1	9993	F2
7421	D3	9466	A5	9994	F2
7440	C1	9480	C5	9995	F2
7441	C1	9501	B7	9996	F3
7442	C1	9502	B7	9997	G2
7480	D5	9503	B7	9998	G3
7481	D2	9504	B7	9999	F4
7482	D2	9505	D8		
7483	D2	9511	C7		
7502	C8	9512	C7		
7504	C7	9513	C7		
7505	C8	9514	C8		
7506	D8	9515	E6		
7510	E6	9517	E7		
7511	E6	9518	C7		
7528	E7	9519	C8		
7529	D7	9520	E6		
7600	C1	9523	D7		
7602	B1	9524	D7		
7603	B1	9525	C7		
7605	C1	9526	A7		
7606	C1	9620	A1		
7610	D1	9622	A1		
7611	D1	9623	B2		
7620	A1	9624	B3		
7640	B1	9705	G7		
7641	C2	9707	G4		
7652	B6	9712	F5		
7701	G6	9713	G4		
7702	F4	9714	G4		
7710	F4	9715	G4		
7711	F5	9718	G4		
7715	F4	9720	G3		
7720	D5	9721	G6		
7721	E5	9722	G4		
7722	D5	9723	F5		
7723	E5	9906	D6		
7724	D5	9907	E3		
7725	E5	9908	E3		
7730	G4	9909	E2		
7731	G4	9910	E2		
7732	G4	9911	E2		
7733	G6	9912	E2		
7740	G5	9913	E2		
7750	G4	9914	E3		
7900	E1	9915	E3		
7901	F1	9916	E3		
7905	E3	9917	E3		
7906	F2	9918	E3		
7907	F3	9919	E3		
9001	C9	9922	E2		
9102	D9	9925	F2		
9110	E7	9926	F2		
9115	E7	9927	F3		
9201	G3	9928	F3		

CL96532156_090.eps
030300

Part 2

CL96532156_084.pdf
180200

Part 4

CL96532156_086.pdf
180200

CL96532156_073.eps
030300

Sim connector (male)

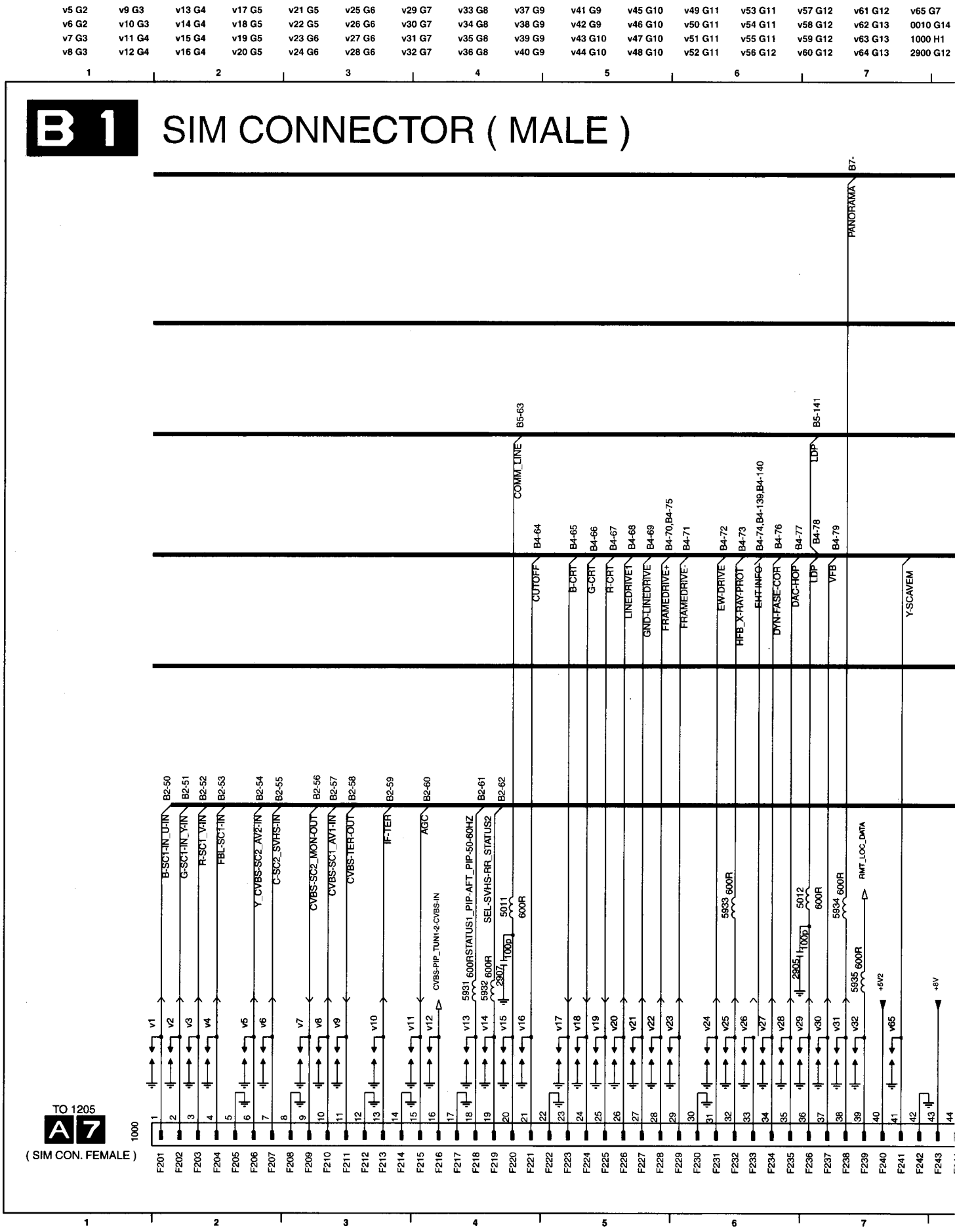

2901 G12	2905 G6	2909 G9	2913 G10	2917 G10	5013 F8	5017 F9	5021 F13	5914 F9	5918 F10	5922 F11	5926 F12	5930 F12	5934 F7
2902 G13	2906 G8	2910 G9	2914 G10	5010 F13	5014 G8	5018 F9	5911 F9	5915 F10	5919 F11	5923 F11	5927 F10	5931 G4	5935 G7
2903 G13	2907 G4	2911 G9	2915 G10	5011 F4	5015 F8	5019 F12	5912 F9	5916 F10	5920 F11	5924 F11	5928 F12	5932 G4	
2904 G9	2908 G9	2912 G10	2916 G11	5012 F7	5016 F8	5020 F13	5913 F9	5917 F10	5921 F11	5925 F12	5929 F12	5933 F6	

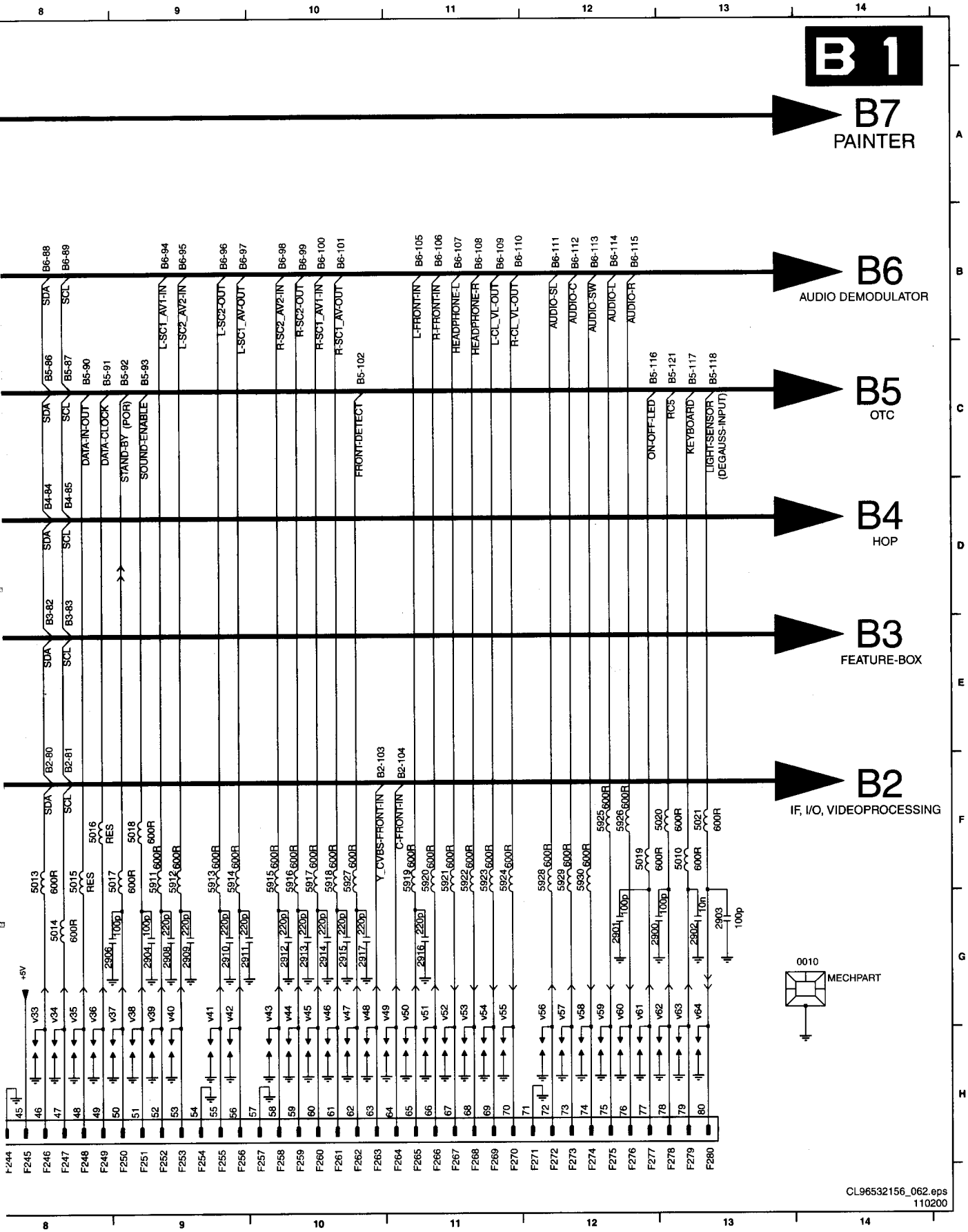

IF, I/O videoprocessing

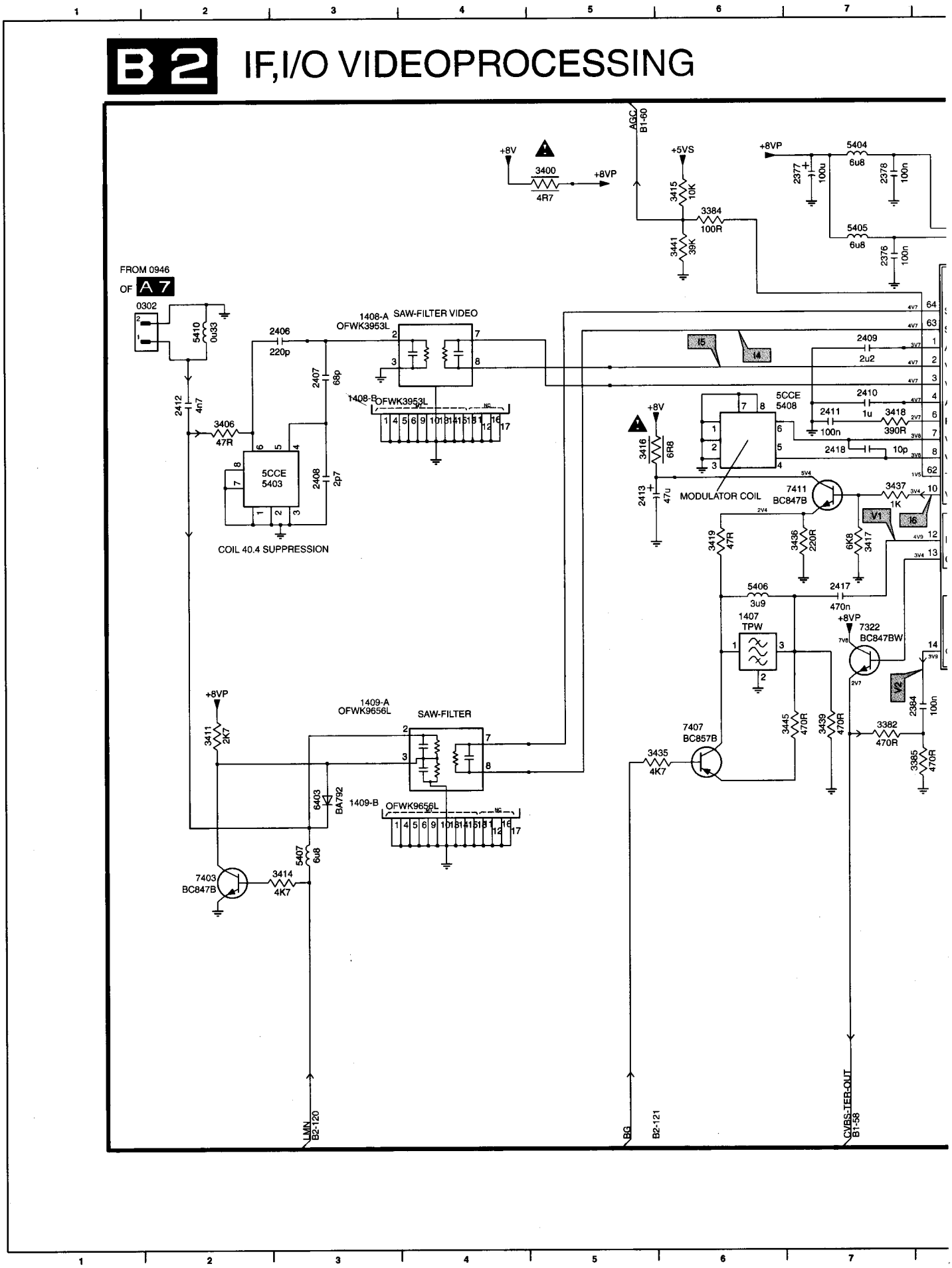

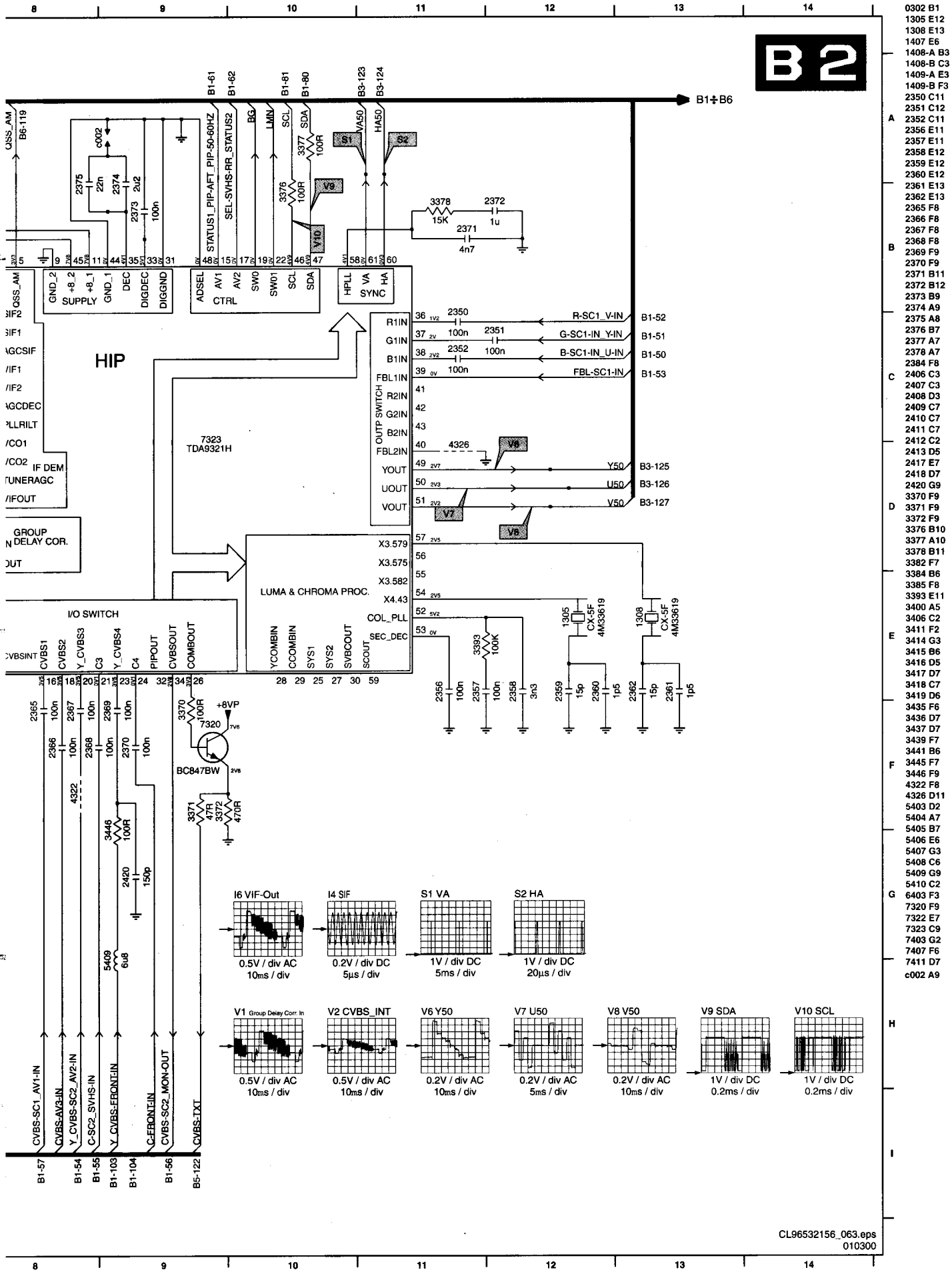

0302 B1
1305 E12
1308 E13
1407 E6
1408-A B3
1408-B C3
1409-A E3
1409-B F3
2350 C11
2351 C12
2352 C11
2356 E11
2357 E11
2358 E12
2359 E12
2360 E12
2361 E13
2362 E13
2365 F8
2366 F8
2367 F8
2368 F8
2369 F9
2370 F9
2371 B11
2372 B12
2373 B9
2374 A9
2375 A8
2376 B7
2377 A7
2378 A7
2384 F8
2406 C3
2407 C3
2408 D3
2409 C7
2410 C7
2411 C7
2412 C2
2413 D5
2417 E7
2418 D7
2420 G9
3370 F9
3371 F9
3372 F9
3376 B10
3377 A10
3378 B11
3382 F7
3384 B6
3385 F8
3393 E11
3400 A5
3406 C2
3411 F2
3414 G3
3415 B6
3416 D5
3417 D7
3418 C7
3419 D6
3435 F6
3436 D7
3437 D7
3439 F7
3441 B6
3445 F7
3446 F9
4322 F8
4326 D11
5403 D2
5404 A7
5405 B7
5406 E6
5407 G3
5408 C6
5409 G9
5410 C2
6403 F3
7320 F9
7322 E7
7323 C9
7403 G2
7407 F6
7411 D7
c002 A9

Feature box

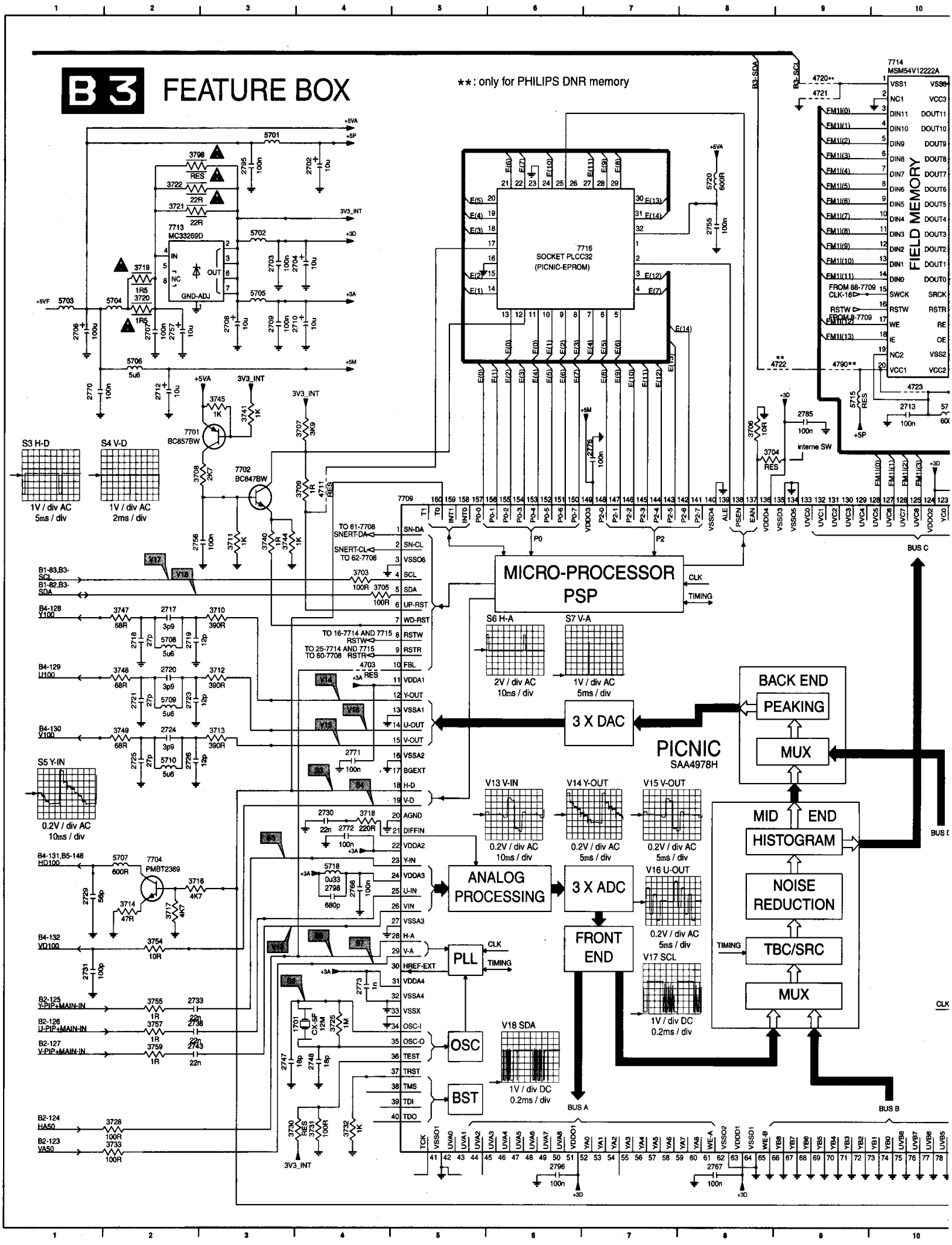
B 3 FEATURE BOX
**: only for PHILIPS DNR memory
7713 MC33269D
7716 SOCKET PLCC32 (PICNIC-EPROM)
7714 MSM54V12222A
FIELD MEMORY
7709
MICRO-PROCESSOR PSP
PICNIC SAA4978H
BACK END
PEAKING
MUX
3 X DAC
MID END
HISTOGRAM
NOISE REDUCTION
TBC/SRC
MUX
ANALOG PROCESSING
3 X ADC
FRONT END
PLL
OSC
BST
BUS A
BUS B
BUS C
S3 H-D
S4 V-D
S5 Y-IN
S6 H-A
S7 V-A
V13 V-IN
V14 Y-OUT
V15 V-OUT
V16 U-OUT
V17 SCL
V18 SDA

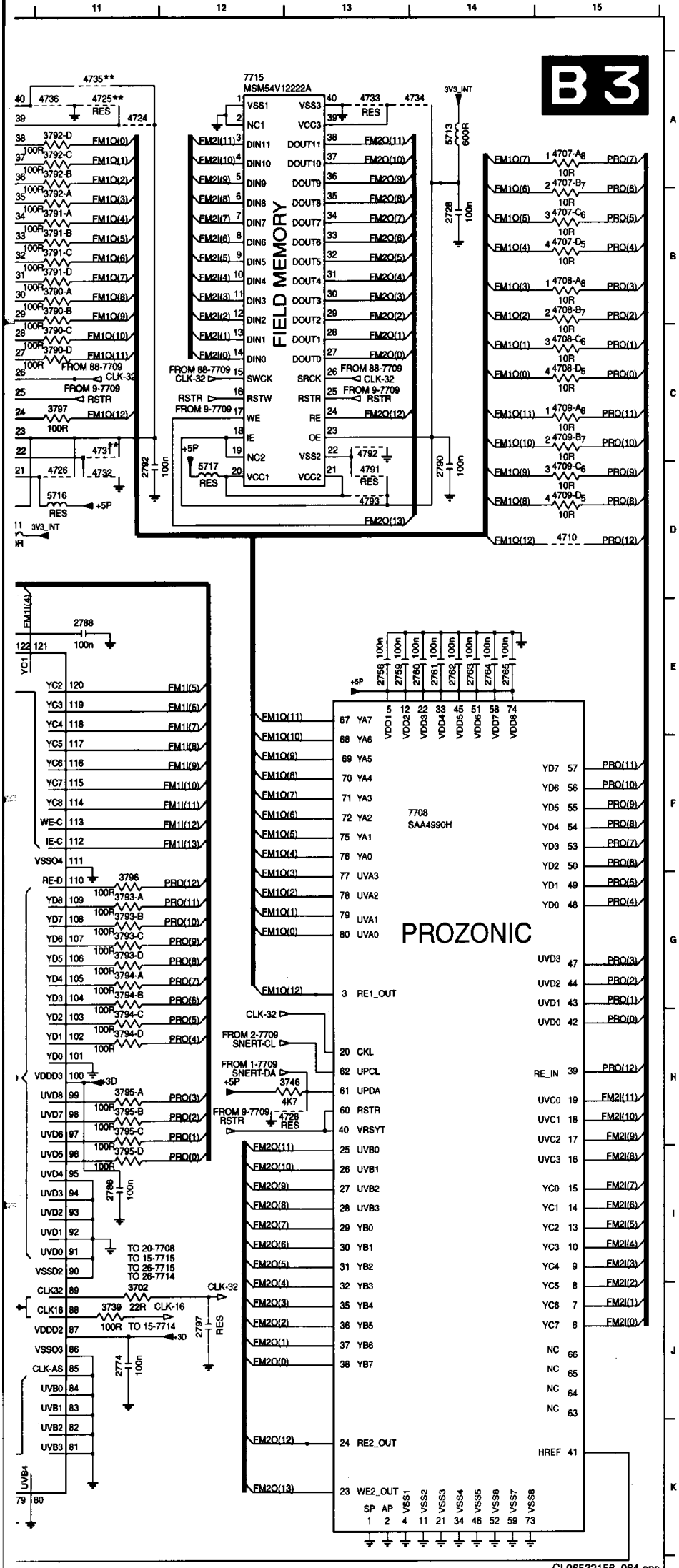

1701 J4	3793-A G11
2702 B4	3793-B G11
2703 C3	3793-C G11
2704 C4	3793-D G11
2706 C1	3794-A G11
2707 C2	3794-B G11
2708 C3	3794-C H11
2709 C3	3794-D H11
A 2710 C4	3795-A H11
2712 D2	3795-B H11
2713 D10	3795-C H11
2717 F2	3795-D I11
2718 F2	3796 G11
2719 F2	3797 C11
2720 F2	3798 B2
2721 G2	4703 F4
2723 G2	4707-A A15
B 2724 G2	4707-B A15
2725 G2	4707-C B15
2726 G2	4707-D B15
2728 B14	4708-A B15
2729 I1	4708-B B15
2730 H4	4708-C C15
2731 I1	4708-D C15
2733 J2	4709-A C15
2738 J2	4709-B C15
C 2743 J2	4709-C D15
2747 J3	4709-D D15
2748 J4	4710 D15
2755 B8	4711 E4
2756 E2	4720 A9
2757 C2	4721 A9
2758 E13	4722 D9
2759 E13	4723 D10
2760 E14	4724 A11
2761 E14	4725 A11
D 2762 E14	4726 D11
2763 E14	4728 H13
2764 E14	4731 C11
2765 E14	4732 D11
2766 I4	4733 A13
2767 K8	4734 A14
2770 D1	4735 A11
2771 G4	4736 A11
2772 H4	4790 D9
E 2773 I4	4791 D13
2774 J11	4792 C13
2776 D7	4793 D13
2785 D9	5701 A3
2786 I11	5702 B3
2788 E11	5703 C1
2790 D14	5704 C2
2792 D11	5705 C3
2795 B3	5706 D2
F 2796 K6	5707 H2
2797 J12	5708 F2
2798 I4	5709 G2
3702 J11	5710 G2
3703 F4	5711 D10
3704 D8	5713 A14
3705 F4	5715 D9
3706 D8	5716 D11
3707 D4	5717 D12
G 3708 E2	5718 H4
3709 E4	5720 B8
3710 F3	7701 D2
3711 E3	7702 E3
3712 F3	7704 H2
3713 G3	7708 F13
3714 I2	7709 E5
3716 H2	7713 B2
3717 I2	7714 A10
3718 H4	7715 A12
H 3719 C2	7716 B7
3720 C2	
3721 B2	
3722 B2	
3725 J4	
3726 K2	
3730 K3	
3731 K4	
3732 K4	
I 3733 K2	
3739 J11	
3740 E3	
3741 D3	
3744 E3	
3745 D3	
3746 H13	
3747 F2	
3748 F2	
3749 G2	
J 3754 I2	
3755 J2	
3757 J2	
3759 J2	
3790-A B11	
3790-B B11	
3790-C C11	
3790-D C11	
3791-A B11	
K 3791-B B11	
3791-C B11	
3791-D B11	
3792-A B11	
3792-B A11	
3792-C A11	
3792-D A11	

Diversity Small Signal Panel (B3)

Item	100HZ INCR ST	DS VIRT DLB	100HZ DLB
2728	-	100N	-
2758	-	100N	-
2759	-	100N	-
2760	-	100N	-
2761	-	100N	-
2762	-	100N	-
2763	-	100N	-
2764	-	100N	-
2765	-	100N	-
2790	-	100N	-
3793	10R	100R	10R
3794	10R	100R	10R
3795	10R	100R	10R
3796	10R	100R	10R
4707	10R	-	10R
4708	10R	-	10R
4709	10R	-	10R
4710	JUMP	-	JUMP
4734	-	JUMP	-
4792	-	JUMP	-
4793	-	JUMP	-
5713	-	FXDIND	-
7708	-	SAA4990H	-
7715	-	MSM54V12222A-30JS	-

HOP

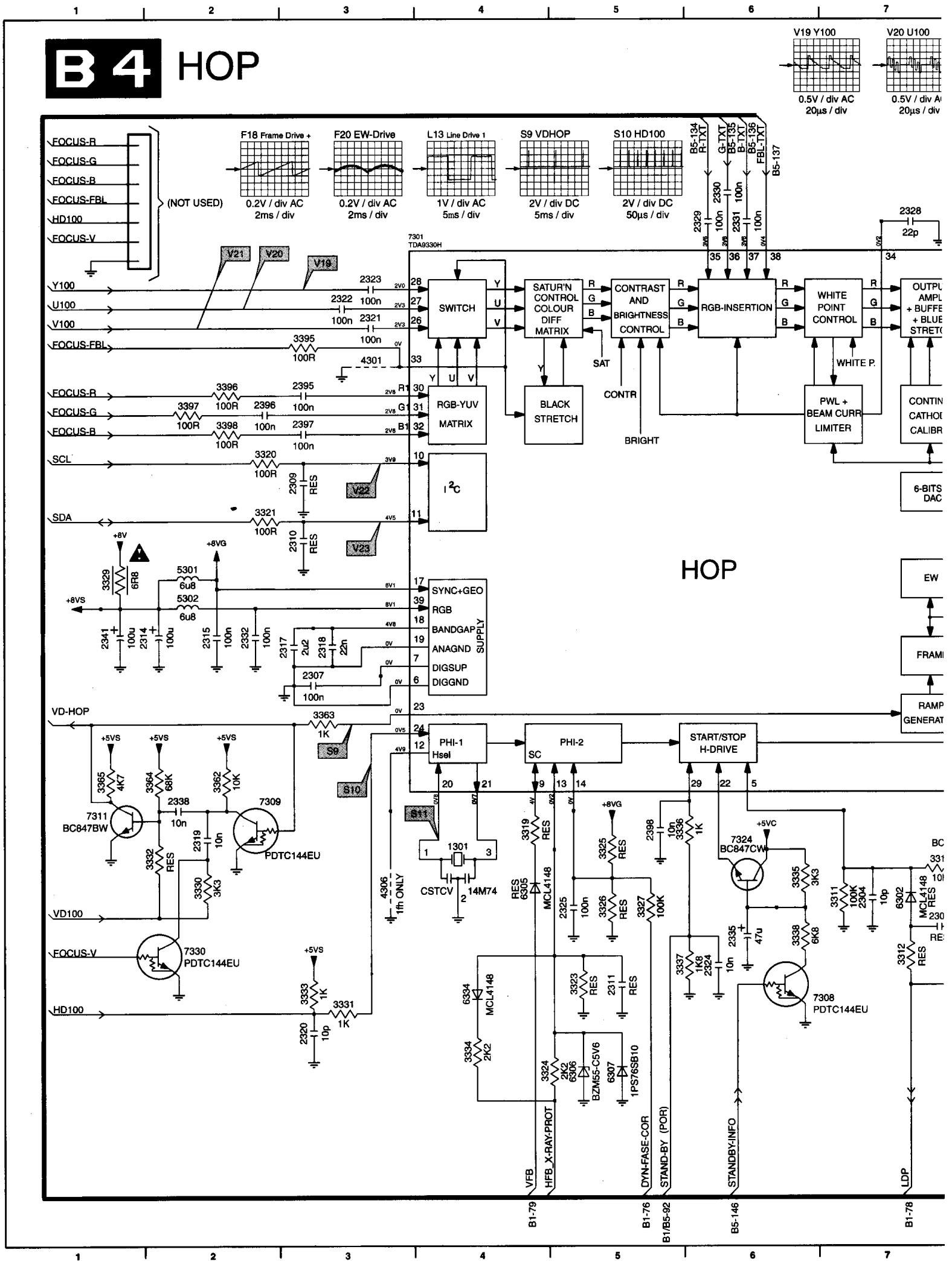
B 4 HOP
V19 Y100
0.5V / div AC
20µs / div
V20 U100
0.5V / div AC
20µs / div
F18 Frame Drive +
0.2V / div AC
2ms / div
F20 EW-Drive
0.2V / div AC
2ms / div
L13 Line Drive 1
1V / div AC
5ms / div
S9 VDHOP
2V / div DC
5ms / div
S10 HD100
2V / div DC
50µs / div
FOCUS-R
FOCUS-G
FOCUS-B
FOCUS-FBL
HD100
FOCUS-V
(NOT USED)
7301
TDA9330H
SWITCH
SATUR'N CONTROL COLOUR DIFF MATRIX
CONTRAST AND BRIGHTNESS CONTROL
RGB-INSERTION
WHITE POINT CONTROL
RGB-YUV MATRIX
BLACK STRETCH
PWL + BEAM CURR LIMITER
SAT
CONTR
BRIGHT
WHITE P.
I²C
SYNC+GEO
RGB
BANDGAP
ANAGND
DIGSUP
DIGGND
SUPPLY
HOP
EW
FRAMI
RAMP GENERAT
PHI-1
Hsel
PHI-2
SC
START/STOP H-DRIVE
VD-HOP
VD100
FOCUS-V
HD100
7311 BC847BW
7309 PDTC144EU
7330 PDTC144EU
7324 BC847CW
7308 PDTC144EU
1301
CSTCV
14M74
4306 1fh ONLY
VFB
HFB_X-RAY-PROT
DYN-FASE-COR
STAND-BY (POR)
STANDBY-INFO
LDP
B1-79
B1-76
B1/B5-92
B5-146
B1-78

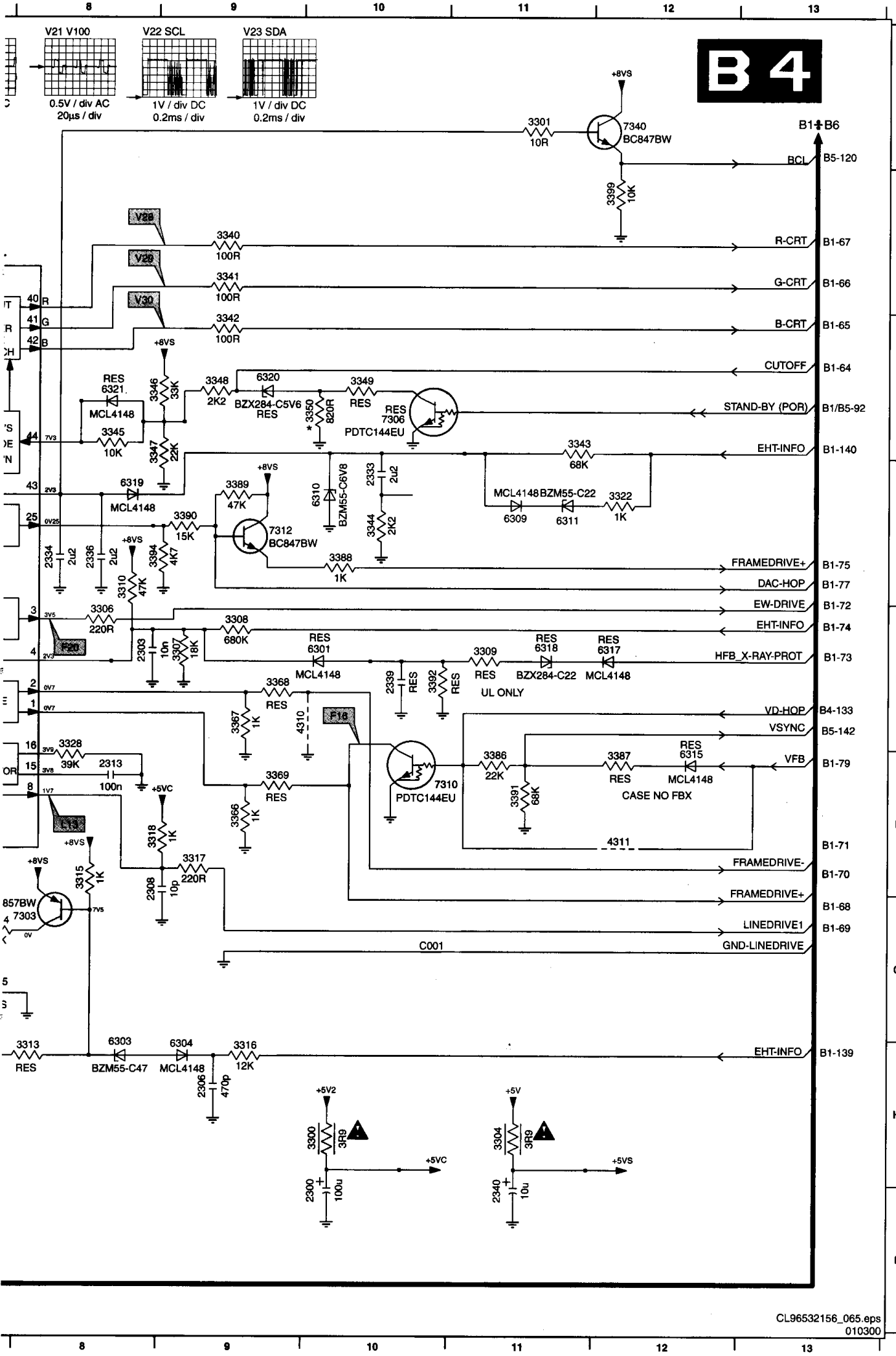

A	1301 G4	3349 C10
	2300 I10	3350 C10
	2303 E8	3362 F2
	2304 G7	3363 F3
	2305 G7	3364 F2
	2306 H9	3365 F1
	2307 E3	3366 F9
	2308 F8	3367 E9
	2309 D3	3368 E9
	2310 D3	3369 F9
	2311 H5	3386 F11
	2313 F8	3387 F12
	2314 E2	3388 D10
	2315 E2	3389 D9
	2317 E3	3390 D9
B	2318 E3	3391 F11
	2319 G2	3392 E10
	2320 H3	3394 D8
	2321 C3	3395 C3
	2322 C3	3396 C2
	2323 B3	3397 C2
	2324 G6	3398 C2
	2325 G5	3399 B12
	2328 B7	4301 C3
C	2329 B6	4306 G3
	2330 B6	4310 E10
	2331 B6	4311 F12
	2332 E2	5301 E2
	2333 D10	5302 E2
	2334 D8	6301 E10
	2335 G6	6302 G7
	2336 D8	6303 H8
	2338 F2	6304 H9
D	2339 E10	6305 G4
	2340 I11	6306 H5
	2341 E1	6307 H5
	2395 C3	6309 D11
	2396 C2	6310 D10
	2397 C3	6311 D11
	2398 F5	6315 F12
	3300 H10	6317 E12
	3301 A11	6318 E11
	3304 H11	6319 D8
E	3306 E8	6320 C9
	3307 E9	6321 C8
	3308 E9	6334 H4
	3309 E11	7301 B3
	3310 D8	7303 G8
	3311 G7	7306 C10
	3312 G7	7308 H6
	3313 H8	7309 F3
	3314 G7	7310 F11
F	3315 F8	7311 F1
	3316 H9	7312 D9
	3317 F9	7324 G6
	3318 F8	7330 G2
	3319 F4	7340 A12
	3320 D2	C001 G10
	3321 D2	
	3322 D12	
	3323 H5	
G	3324 H4	
	3325 G5	
	3326 G5	
	3327 G5	
	3328 E8	
	3329 E1	
	3330 G2	
	3331 H3	
	3332 G2	
	3333 H3	
H	3334 H4	
	3335 G6	
	3336 F5	
	3337 G5	
	3338 G6	
	3340 B9	
	3341 B9	
	3342 C9	
	3343 C11	
I	3344 D10	
	3345 C8	
	3346 C8	
	3347 C8	
	3348 C9	

OTC

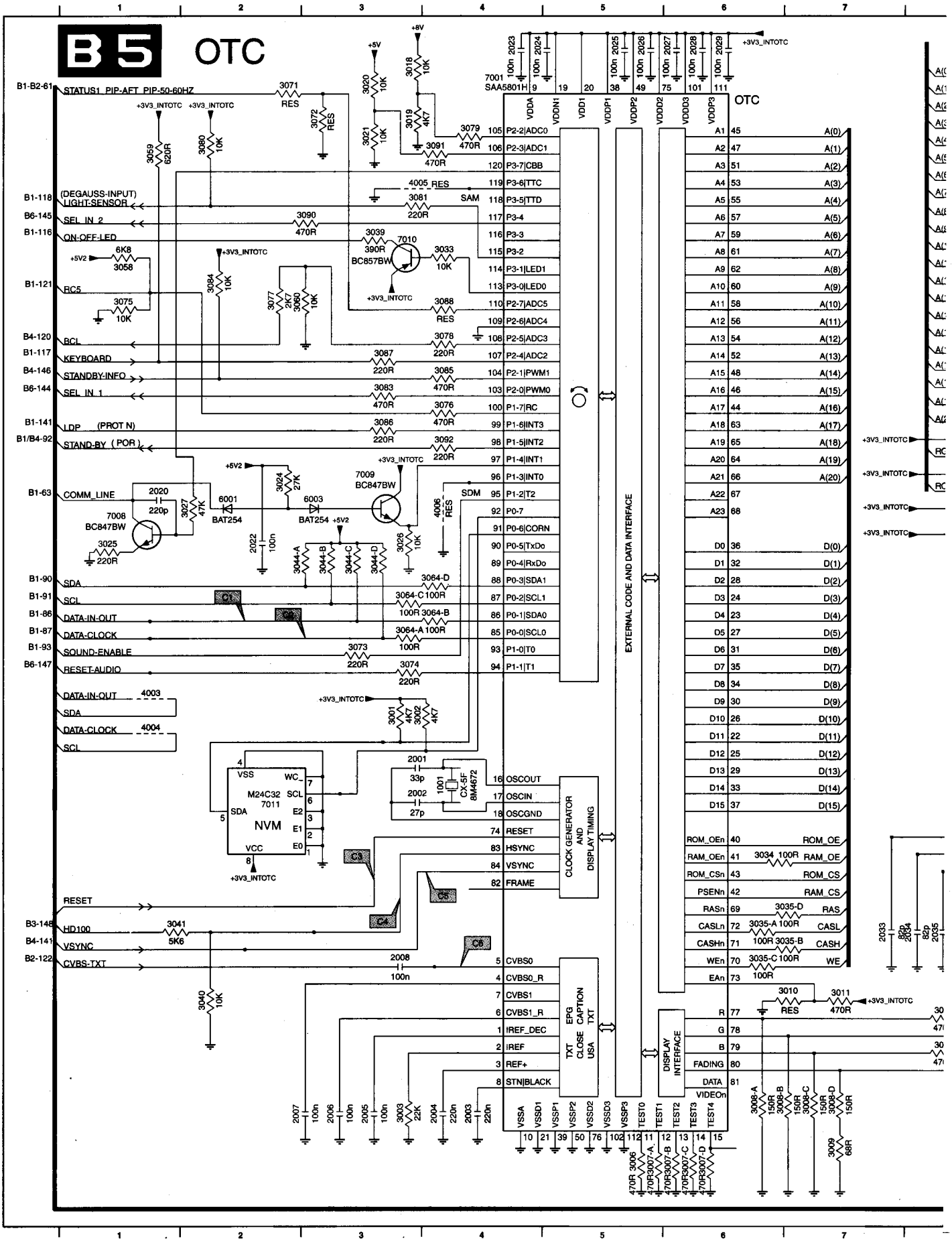
B5 OTC
7001 SAA5801H
OTC
EXTERNAL CODE AND DATA INTERFACE
CLOCK GENERATOR AND DISPLAY TIMING
EPG CAPTION TXT
TXT CLOSE USA
DISPLAY INTERFACE
NVM
M24C32 7011
STATUS1_PIP-AFT_PIP-50-60HZ
(DEGAUSS-INPUT) LIGHT-SENSOR
SEL_IN_2
ON-OFF-LED
RC5
BCL
KEYBOARD
STANDBY-INFO
SEL_IN_1
LDP (PROT N)
STAND-BY (POR)
COMM_LINE
SDA
SCL
DATA-IN-OUT
DATA-CLOCK
SOUND-ENABLE
RESET-AUDIO
RESET
HD100
VSYNC
CVBS-TXT
ROM_OE
RAM_OE
ROM_CS
RAM_CS
RAS
CASL
CASH
WE

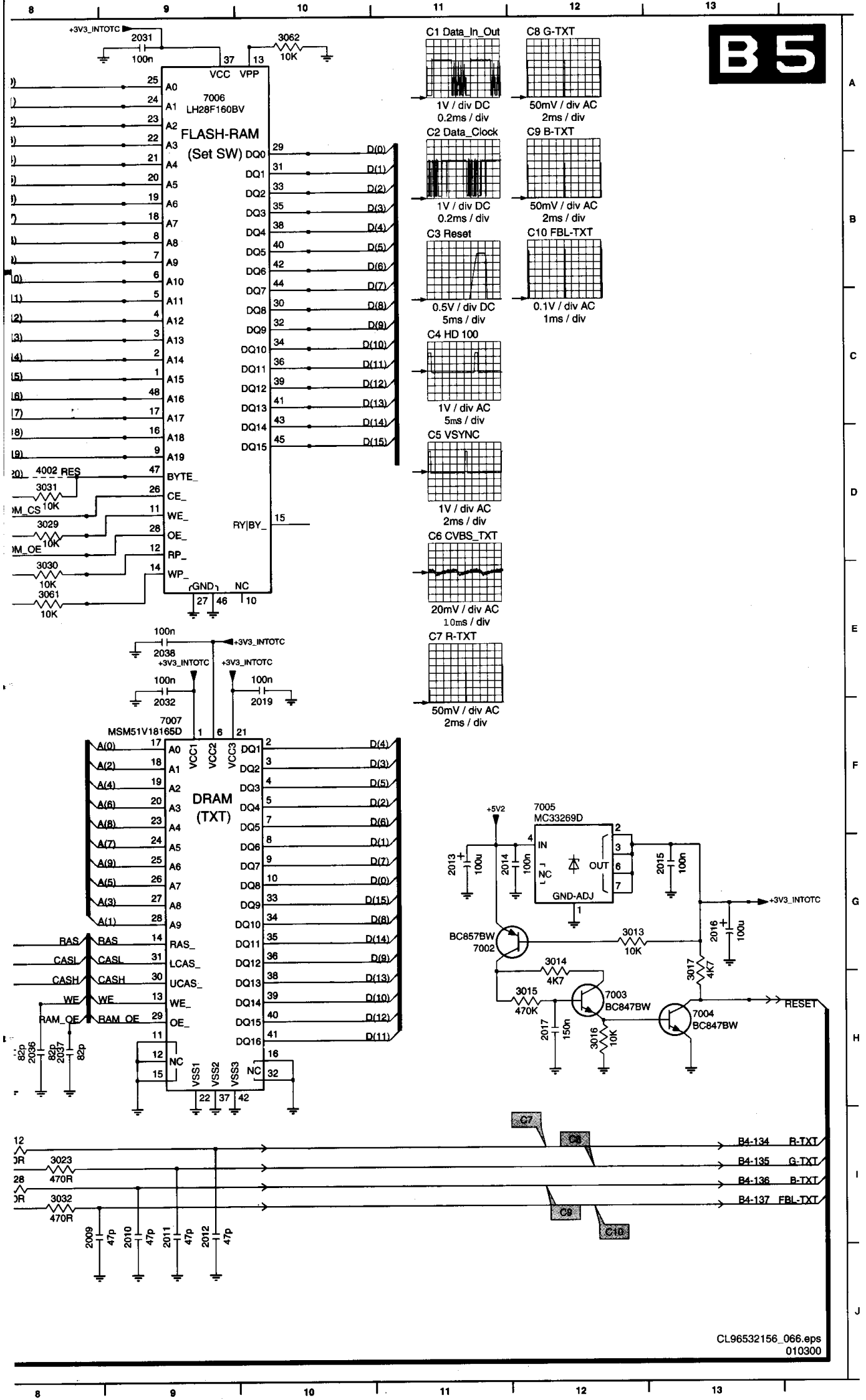

1001 G4
2001 G3
2002 G3
2003 J4
2004 J4
2005 J3
2006 J3
2007 J2
2008 H3
2009 I8
2010 I9
2011 I9
2012 I9
2013 G11
2014 G11
2015 G13
2016 G13
2017 H12
2019 E10
2020 D1
2022 E2
2023 A4
2024 A4
2025 A5
2026 A5
2027 A6
2028 A6
2029 A6
2031 A9
2032 E9
2033 H7
2034 H8
2035 H8
2036 H8
2037 H8
2038 E9
3001 F3
3002 F3
3003 J3
3006 J5
3007-A J5
3007-B J6
3007-C J6
3007-D J6
3008-A I6
3008-B I6
3008-C I7
3008-D I7
3009 J7
3010 I7
3011 I7
3012 I8
3013 G12
3014 G12
3015 H12
3016 H12
3017 G13
3018 A3
3019 A3
3020 A3
3021 A3
3023 I8
3024 D2
3025 E1
3026 E3
3027 E2
3028 I8
3029 D8
3030 E8
3031 D8
3032 I8
3033 B4
3034 G6
3035-A H6
3035-B H7
3035-C H6
3035-D H7
3039 B3
3040 I2
3041 H1
3044-A E2
3044-B E3
3044-C E3
3044-D E3
3058 C1
3059 B1
3060 C2
3061 E8
3062 A10
3064-A F3
3064-B E4
3064-C E3
3064-D E4
3071 A2
3072 A3
3073 F3
3074 F3
3075 C1
3076 D4
3077 C2
3078 C4
3079 A4
3080 B2
3081 B3
3083 D3
3084 C2
3085 C4
3086 D3
3087 C3
3088 C4
3090 B3
3091 B4
3092 D4
4002 D8
4003 F1
4004 F1
4005 B3
4006 E4
6001 E2
6003 E3
7001 A4
7002 G11
7003 H12
7004 H13
7005 F12
7006 A9
7007 F9
7008 E1
7009 D3
7010 B3
7011 G2

Audio demodulator

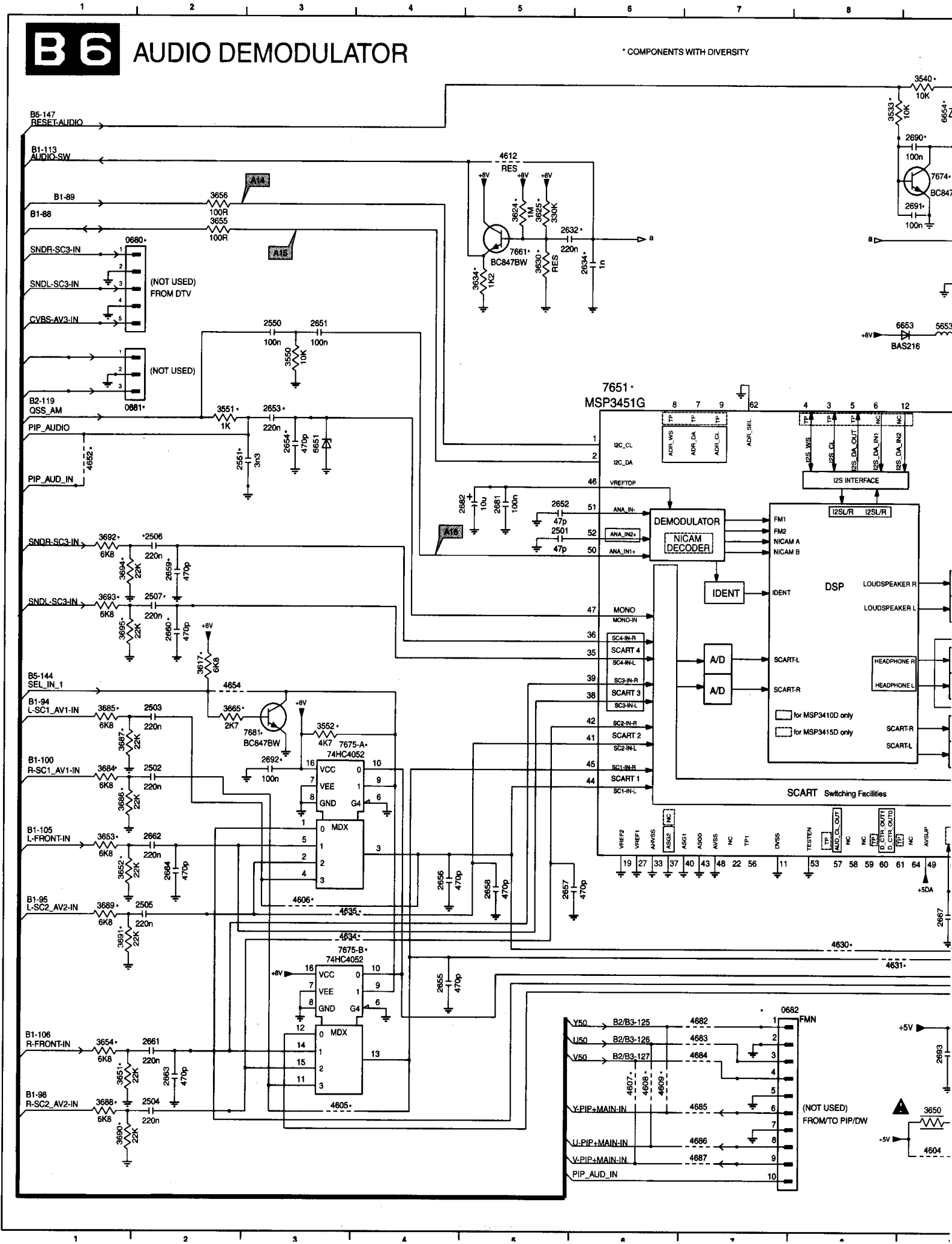

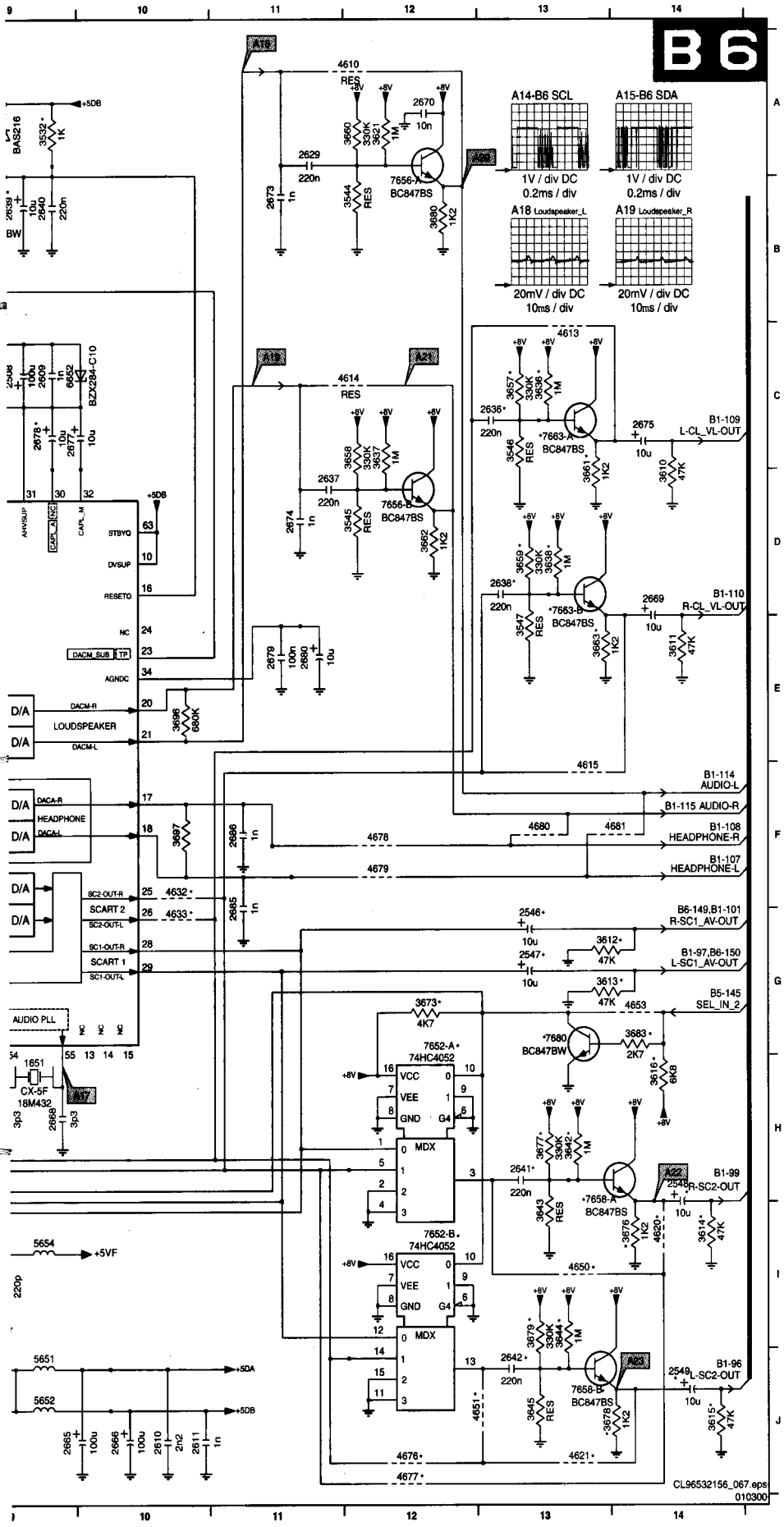

	0680 B1	3645 J13	7681 F3
	0681 D1	3650 J9	
	0682 I7	3651 I1	
	1651 H9	3652 H1	
	2501 E5	3653 G1	
	2502 G2	3654 I1	
A	2503 F2	3655 B2	
	2504 J2	3656 B2	
	2505 H2	3657 C13	
	2506 E2	3658 C12	
	2507 E2	3659 D13	
	2508 C9	3660 A12	
	2546 G13	3661 C13	
	2547 G13	3662 D12	
	2548 H14	3663 E13	
B	2549 J14	3665 F2	
	2550 C3	3673 G12	
	2551 D2	3676 I14	
	2609 C9	3677 H13	
	2610 J10	3678 J13	
	2611 J10	3679 I13	
	2629 A11	3680 B12	
	2632 B5	3683 G14	
	2634 B6	3684 G1	
	2636 C13	3685 F1	
C	2637 D11	3686 G1	
	2638 D13	3687 F1	
	2639 B9	3688 J1	
	2640 B9	3689 H1	
	2641 H13	3690 J1	
	2642 J13	3691 H1	
	2651 C3	3692 E1	
	2652 E5	3693 E1	
	2653 D3	3694 E1	
D	2654 D3	3695 F1	
	2655 H4	3696 E10	
	2656 H4	3697 F10	
	2657 H5	4604 J9	
	2658 H5	4605 J3	
	2659 E2	4606 H3	
	2660 F2	4607 I6	
	2661 I2	4608 I6	
	2662 G2	4609 I6	
E	2663 I2	4610 A12	
	2664 H2	4612 B5	
	2665 J9	4613 B13	
	2666 J10	4614 C12	
	2667 H9	4615 F13	
	2668 H9	4620 I14	
	2669 D14	4621 J13	
	2670 A12	4630 H8	
	2673 B11	4631 H8	
	2674 D11	4632 F10	
F	2675 C14	4633 G10	
	2677 C9	4634 H3	
	2678 C9	4635 H3	
	2679 E11	4650 I13	
	2680 E11	4651 J13	
	2681 D5	4652 D1	
	2682 D5	4653 G14	
	2685 F11	4654 F2	
	2686 F11	4676 J12	
G	2690 A9	4677 J12	
	2691 B9	4678 F12	
	2692 G3	4679 F12	
	2693 I9	4680 F13	
	3532 A9	4681 F14	
	3533 A8	4682 I7	
	3540 A9	4683 I7	
	3544 B12	4684 I7	
	3545 D12	4685 J7	
H	3546 C13	4686 J7	
	3547 E13	4687 J7	
	3550 C3	5651 J9	
	3551 D2	5652 J9	
	3552 F3	5653 C9	
	3610 C14	5654 I9	
	3611 E14	6651 D3	
	3612 G13	6652 C9	
	3613 G13	6653 C9	
	3614 I14	6654 A9	
I	3615 J14	7651 D6	
	3616 H14	7652-A G12	
	3617 F2	7652-B I12	
	3621 A12	7656-A B12	
	3624 B5	7656-B D12	
	3625 B5	7658-A I13	
	3630 B5	7658-B J13	
	3634 C5	7661 B5	
	3636 C13	7663-A C13	
J	3637 C12	7663-B D13	
	3638 D13	7674 B9	
	3642 H13	7675-A G4	
	3643 I13	7675-B H4	
	3644 I13	7680 G13	

Diversity Small Signal Panel (B6)

Item	100HZ INCR ST	DS VIRT DLB	100HZ DLB
2636	220N	-	-
2638	220N	-	-
2641	220N	-	-
2642	220N	-	-
2663	-	470P	470P
2664	-	470P	470P
2677	2U2	10U	10U
2678	-	10U	10U
2678	-	10U	10U
2685	-	1N	1N
2686	-	1N	1N
2692	100N	-	-
3552	4K7	-	-
3617	6K8	-	-
3636	1M	-	-
3638	1M	-	-
3642	1M	-	-
3644	1M	-	-
3657	330K	-	-
3659	330K	-	-
3661	1K2	-	-
3663	1K2	-	-
3665	2K7	-	-
3676	1K2	-	-
3677	330K	-	-
3678	1K2	-	-
3679	330K	-	-
4605	-	JUMP	JUMP
4606	-	JUMP	JUMP
4613	-	JUMP	JUMP
4615	-	JUMP	JUMP
4620	-	JUMP	JUMP
4621	-	JUMP	JUMP
4630	JUMP	-	-
4631	JUMP	-	-
4632	-	JUMP	JUMP
4633	-	JUMP	JUMP
4634	-	JUMP	JUMP
4635	-	JUMP	JUMP
4650	-	JUMP	JUMP
4651	-	JUMP	JUMP
4678	-	JUMP	JUMP
4679	-	JUMP	JUMP
4680	JUMP	-	-
4681	JUMP	-	-
7651	MSP3415D-FH-B3	MSP3451G-FH-A1	MSP3451G-FH-A1
7658	BC847BS	-	-
7663	BC847BS	-	-
7675	74HC4052PW	-	-
7681	BC847BW	-	-

SSP (LOT side overview)

1 2 3

A B

Part 1

CL96532156_043.pdf
140200

Part 2

CL96532156_044.pdf
140200

C D

Part 3

CL96532156_045.pdf
140200

Part 4

CL96532156_046.pdf
140200

1 2 3

CL96532156_053.ep
14020

A

B

C

D

1000	B1	2743	C3	3657	D2	5918	C1
1001	B3	2757	C3	3659	D1	5919	C1
1305	A2	2765	D3	3661	D1	5920	D1
1308	A2	2767	C3	3663	D1	5921	D1
1407	A1	2771	C3	3665	C2	5922	D1
1409	A2	2772	C3	3676	D2	5923	D1
2001	A3	2773	C3	3677	D1	5924	D1
2002	A3	2774	D3	3678	D2	5925	D1
2004	B3	2776	C3	3679	D1	5926	D1
2005	B3	2785	C3	3683	C2	5927	C1
2006	B3	2790	D3	3692	C2	5928	D1
2007	B3	2796	C3	3693	C2	5929	D1
2009	B3	2797	D3	3694	C2	5930	D1
2010	B3	2798	C3	3695	C2	5931	A1
2011	B3	3003	B3	3697	D2	5932	B1
2012	B3	3010	B3	3702	D3	5933	B1
2013	A3	3011	B3	3703	C3	5934	A1
2016	A3	3012	B3	3704	C3	5935	B1
2019	A3	3018	B3	3705	C3	6001	B3
2020	B3	3019	B3	3706	C3	6003	B3
2023	B3	3020	B3	3714	C2	6403	A2
2025	A3	3021	B3	3716	C2	6652	D2
2026	B3	3023	B3	3717	C2	6653	D2
2027	B3	3024	B3	3728	C3	6654	D2
2028	A3	3025	B3	3733	C3	7001	B3
2029	B3	3026	B3	3739	D3	7007	A3
2032	A3	3027	B3	3755	C3	7008	B3
2033	A3	3028	B3	3757	C3	7009	B3
2034	A3	3029	A3	3759	C3	7010	B3
2035	A3	3032	B3	3790	D3	7323	A2
2036	A3	3033	B3	3791	D3	7340	B2
2037	A3	3034	A3	3792	D3	7403	A2
2300	B1	3035	A3	3797	D3	7658	D2
2314	B1	3039	B3	4311	B1	7663	D1
2315	B2	3041	B3	4322	A1	7674	D2
2317	B2	3058	B3	4326	B2	7675	C2
2318	B2	3059	B3	4605	C2	7680	C2
2332	B2	3062	A3	4606	C2	7681	C2
2335	B2	3071	B3	4607	C2	7704	C3
2336	B2	3072	B3	4608	C2	7709	C3
2340	B2	3073	B3	4609	C2	7714	D3
2341	B2	3074	B3	4613	D2	7715	D3
2350	B1	3075	B3	4615	D1		
2351	B1	3076	B3	4632	D2		
2352	B1	3078	B3	4633	D2		
2356	B2	3079	B3	4653	C2		
2357	B2	3080	B3	4654	C2		
2358	A2	3081	B3	4678	D2		
2365	A1	3083	B3	4679	D2		
2367	A1	3084	B3	4682	C2		
2368	A1	3085	B3	4683	C2		
2376	B2	3086	B3	4684	C2		
2377	B2	3087	B3	4685	C2		
2398	B2	3088	B3	4686	C2		
2406	A2	3090	B3	4687	C2		
2407	A2	3091	B3	4720	D3		
2408	A2	3092	B3	4721	D3		
2409	A2	3300	B1	4722	B3		
2410	A2	3301	B2	4723	D3		
2411	A2	3304	B2	4726	D3		
2417	A2	3317	B1	4731	D3		
2418	A2	3318	B2	4732	D3		
2501	D2	3329	B1	4733	D3		
2506	C2	3335	B2	4734	D3		
2507	C2	3338	B2	4791	D3		
2508	D2	3370	A1	4792	D3		
2546	D1	3376	B2	4793	D3		
2547	C1	3377	B2	5010	C1		
2548	C1	3393	A2	5011	C1		
2549	C1	3394	B2	5012	B1		
2550	C2	3399	B2	5013	B1		
2609	D2	3400	B2	5014	B1		
2636	D2	3406	A2	5015	C1		
2638	D1	3411	A2	5016	C1		
2639	D2	3414	A2	5017	B1		
2641	D1	3417	A2	5018	C1		
2642	C1	3418	A2	5019	C1		
2651	D2	3437	A2	5020	C1		
2665	D2	3532	D2	5021	B1		
2666	D2	3533	D2	5301	B2		
2669	D1	3540	D2	5302	B2		
2675	D1	3546	D2	5403	A2		
2677	D2	3547	D1	5405	B2		
2678	D2	3550	C2	5407	A2		
2680	D2	3552	C1	5653	D2		
2682	D2	3610	D1	5654	D1		
2690	D2	3611	D1	5702	C2		
2691	D2	3612	D1	5707	C2		
2692	C1	3613	C1	5711	D3		
2693	D1	3614	C1	5713	D3		
2702	D3	3615	C1	5715	D3		
2703	D2	3616	C2	5716	D3		
2704	C3	3617	C2	5717	D3		
2706	C3	3636	D2	5911	C1		
2708	C2	3638	D1	5912	C1		
2709	C3	3642	D2	5913	C1		
2713	D3	3643	D1	5914	C1		
2729	C2	3644	D2	5915	C1		
2733	C3	3645	D1	5916	C1		
2738	C3	3650	D1	5917	C1		

CL96532156_042.eps
180200

SSP (tuner side overview)

1 2 3

A

B

Part 1

CL96532156_059.pdf
140200

Part

CL96532156_060
140

C

D

Part 3

CL96532156_061.pdf
140200

Part

CL96532156_062
140

1 2 3

CL96532156

A

2

B

.pdf
200

C

4

D

2pdf
200

0302	A2	2718	C2	3347	B3	4005	B1
0680	D2	2719	C1	3348	B3	4006	A1
0681	C2	2720	C1	3349	B3	4301	B2
0682	D2	2721	C1	3350	B3	4306	B2
1301	B2	2723	C1	3362	B2	4310	B3
1408	A2	2724	C1	3363	B2	4604	D3
1651	D2	2725	C2	3364	B2	4610	D3
1701	C1	2726	C1	3365	A2	4612	D2
2003	B1	2728	D1	3366	B2	4614	D2
2008	B1	2730	C1	3367	B2	4620	D2
2014	A2	2731	C1	3368	B2	4621	C2
2015	A1	2747	C1	3369	B2	4630	C3
2017	A1	2748	C1	3371	A3	4631	D3
2022	A2	2755	C1	3372	B3	4634	C2
2024	B1	2756	C1	3378	A2	4635	C2
2031	A1	2758	D1	3382	A2	4650	D2
2038	A1	2759	D1	3384	A2	4651	C2
2303	B2	2760	D1	3385	A3	4652	C2
2304	B2	2761	D1	3386	B3	4676	C2
2305	B3	2762	D1	3387	B3	4677	D2
2306	B3	2763	D1	3388	B2	4680	D3
2307	B2	2764	D1	3389	B2	4681	D3
2308	B2	2766	C1	3390	B2	4703	C1
2309	B2	2770	C1	3391	B2	4707	D1
2310	B2	2786	D1	3392	B3	4708	D1
2311	B2	2788	C1	3395	A2	4709	D1
2313	B2	2792	D1	3396	A2	4710	D1
2319	B2	2795	D2	3397	A2	4711	C1
2320	B2	2900	C3	3398	A2	4724	D1
2321	B2	2901	C3	3415	A2	4725	D1
2322	B2	2902	C3	3416	A3	4728	D1
2323	B2	2903	C3	3419	A3	4735	D1
2324	B2	2904	C3	3435	A3	4736	D1
2325	B2	2905	C3	3436	A2	4790	D1
2328	B2	2906	B3	3439	A2	5404	A2
2329	B2	2907	C3	3441	A2	5406	A3
2330	B2	2908	C3	3445	A2	5408	A2
2331	B2	2909	C3	3446	B3	5409	B3
2333	B2	2910	C3	3544	D3	5410	A2
2334	B2	2911	C3	3545	D3	5651	D3
2338	B2	2912	C3	3551	C2	5652	D3
2339	B3	2913	C3	3621	D3	5701	D1
2359	A2	2914	C3	3624	D3	5703	D1
2360	A2	2915	C3	3625	D3	5704	C1
2361	A2	2916	C3	3630	D3	5705	C1
2362	A2	2917	C3	3634	D3	5706	C1
2366	A3	3001	B1	3637	D3	5708	C1
2369	B3	3002	B1	3651	C2	5709	C1
2370	B3	3006	B1	3652	C2	5710	C1
2371	A2	3007	B1	3653	C2	5718	C1
2372	A2	3008	B1	3654	C2	5720	C1
2373	A3	3009	B1	3655	D2	6301	B3
2374	A2	3013	A1	3656	D2	6302	B2
2375	A2	3014	A2	3658	D3	6303	B3
2378	A2	3015	A1	3660	D3	6304	B3
2384	A3	3016	A1	3662	D3	6305	B3
2395	A2	3017	A1	3673	C3	6306	A2
2396	A2	3030	A1	3680	D3	6307	A2
2397	A2	3031	A1	3684	C3	6309	B2
2412	A2	3040	B1	3685	C2	6310	B2
2413	A3	3044	B1	3686	C3	6311	B2
2420	B3	3060	B2	3687	C2	6315	B3
2502	C3	3061	A1	3688	C2	6317	B3
2503	C2	3064	B1	3689	C2	6318	B3
2504	C2	3077	B2	3690	C2	6319	B2
2505	C2	3306	B2	3691	C2	6320	B3
2551	C2	3307	B2	3696	D2	6321	B2
2610	D2	3308	B3	3707	C1	6334	B2
2611	D2	3309	B3	3708	C1	6651	C2
2629	D2	3310	B3	3709	C1	7002	A2
2632	D2	3311	B2	3710	C1	7003	A2
2634	D2	3312	B3	3711	C1	7004	B1
2637	D2	3313	B3	3712	C1	7005	A1
2640	D2	3314	B2	3713	C1	7006	A1
2652	D2	3315	B3	3718	C1	7011	B1
2653	C2	3316	B3	3719	C1	7301	B2
2654	C2	3319	B2	3720	C1	7303	B2
2655	D2	3320	B2	3721	C1	7306	B3
2656	C2	3321	B2	3722	C1	7308	B2
2657	C2	3322	B2	3725	C1	7309	B2
2658	C2	3323	B2	3730	C1	7310	B2
2659	C2	3324	A2	3731	C1	7311	A2
2660	C2	3325	B2	3732	C1	7312	B2
2661	C2	3326	B2	3740	C1	7320	B3
2662	C2	3327	A2	3741	C1	7322	A2
2663	C2	3328	B2	3744	C1	7324	B2
2664	C2	3330	B2	3745	C1	7330	A2
2667	D2	3331	B2	3746	D1	7407	A3
2668	D2	3332	B2	3747	C2	7411	A3
2670	D3	3333	B2	3748	C2	7651	D2
2673	D2	3334	B2	3749	C2	7652	D3
2674	D2	3336	B2	3754	C1	7656	D3
2679	D2	3337	B3	3793	D1	7661	D3
2681	D2	3340	B2	3794	D1	7701	C1
2685	D2	3341	B2	3795	D1	7702	C1
2686	D2	3342	B2	3796	C1	7708	D1
2707	C1	3343	B2	3798	C1	7713	C1
2710	C1	3344	B2	4002	A1	7716	C1
2712	C1	3345	B2	4003	B1		
2717	C1	3346	B3	4004	B1		

_047.eps
140200

CL96532156_048.eps
180200

CRT panel

0031 E5	0298-G D6	2302 A2	2312 D2	2323 E2	3306 A3	3315 B2	3336 E2	3347 F9	3357 C5	7303 C5
0224 E1	0298-H E6	2303 A4	2313 E2	2324 F9	3307 B2	3316 C5	3337 D2	3348 E1	5300 B5	7307 D3
0235 A6	0298-I E9	2304 A4	2315 B1	2325 A3	3308 B5	3317 C2	3338 E5	3349 E8	6305 D5	9310 A5
0298-A E8	0298-K E9	2305 B2	2316 E2	3300 A1	3309 B4	3318 C4	3339 D5	3350 D4	6306 D5	9311 B6
0298-B E8	0334 F10	2306 B2	2317 F9	3301 A4	3310 B6	3319 C5	3340 D5	3351 D4	6307 E4	
0298-C C6	0340 B1	2307 B4	2318 E7	3302 A2	3311 B2	3320 C2	3341 E2	3352 E4	6310 E3	
0298-D C6	0383 B6	2308 C2	2320 E3	3303 A3	3312 B3	3322 B1	3342 D2	3354 E4	7300 A2	
0298-E C6	2300 A4	2309 C4	2321 D2	3304 A5	3313 B3	3334 E7	3343 E1	3355 A5	7301 A3	
0298-F D6	2301 A1	2310 C2	2322 E2	3305 A2	3314 B3	3335 D2	3345 E6	3356 B6	7302 A5	

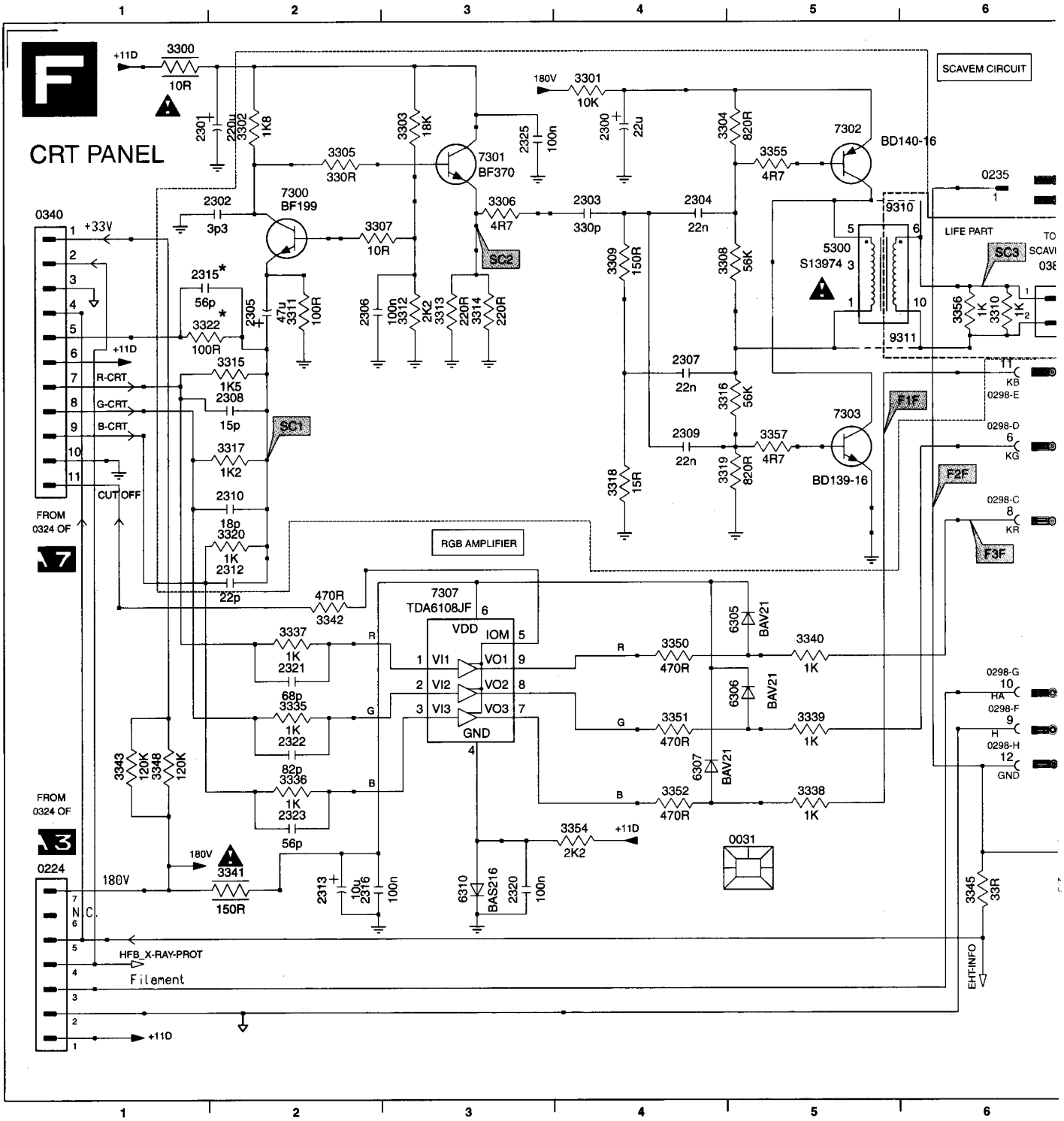

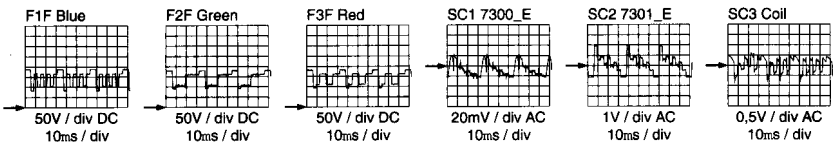

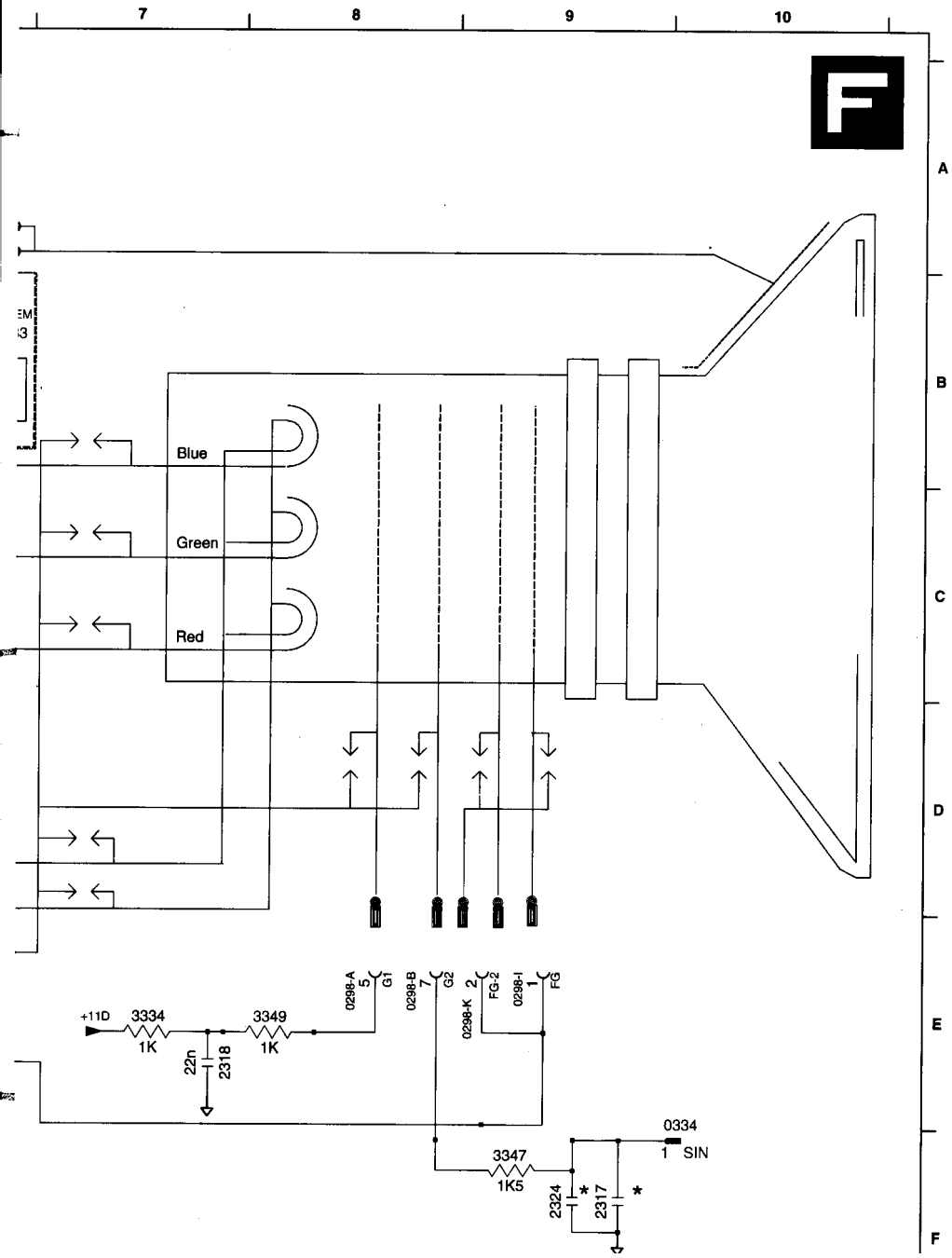

Diversity CRT-Panel					
PosNr	29"	25"	28"	28" WS	32" WS
0298	-	-	-	-	SOC 9P
0298	CON 8P	CON 8P	CON 8P	CON 8P	-
0383	CON 02P	-	-	CON 02P	CON 02P
2300	22U	-	-	22U	22U
2301	220U	-	-	220U	220U
2302	3P3	-	-	3P3	3P3
2303	470P	-	-	470P	470P
2304	22N	-	-	22N	22N
2305	47U	-	-	47U	47U
2306	100N	-	-	100N	100N
2307	22N	-	-	22N	22N
2308	15P	-	-	15P	15P
2309	22N	-	-	22N	22N
2310	18P	-	-	18P	18P
2312	22P	-	-	22P	22P
2317	4N7	4N7	4N7	4N7	-
2317	4N7	4N7	4N7	4N7	-
2321	-	68P	68P	-	-
2322	-	82P	82P	-	-
2323	-	56P	56P	-	-
2324	-	-	-	-	820P
2325	100N	-	-	100N	100N
3300	FUSE 10R	-	-	FUSE 10R	FUSE 10R
3301	3W 10K	-	-	3W 10K	3W 10K
3302	1K8	-	-	1K8	1K8
3303	18K	-	-	18K	18K
3304	820R	-	-	820R	820R
3305	330R	-	-	330R	330R
3306	4R7	-	-	4R7	4R7
3307	10R	-	-	10R	10R
3308	56K	-	-	56K	56K
3309	150R	-	-	150R	150R
3310	1K	-	-	1K	1K
3311	100R	-	-	100R	100R
3312	2K2	-	-	2K2	2K2
3313	220R	-	-	220R	220R
3314	220R	-	-	220R	220R
3315	1K5	-	-	1K5	1K5
3316	56K	-	-	56K	56K
3317	1K2	-	-	1K2	1K2
3318	15R	-	-	15R	15R
3319	820R	-	-	820R	820R
3320	1K	-	-	1K	1K
3335	100R	-	-	100R	100R
3335	-	1K	1K	-	-
3336	100R	-	-	100R	100R
3336	-	1K	1K	-	-
3337	100R	-	-	100R	100R
3337	-	1K	1K	-	-
3355	4R7	-	-	4R7	4R7
3356	1K	-	-	1K	1K
3357	4R7	-	-	4R7	4R7
5300	TFM	-	-	TFM	TFM
7300	SIGF199	-	-	SIGF199	SIGF199
7301	SIGF370	-	-	SIGF370	SIGF370
7302	TRA POW	-	-	TRA POW	TRA POW
7303	TRA POW	-	-	TRA POW	TRA POW
9305	WR	-	-	WR	WR
9308	WR	-	-	WR	WR
9309	WR	-	-	WR	WR
9312	WR	-	-	WR	WR
9313	WR	-	-	WR	WR
9424	-	-	-	-	WR

Side I/O

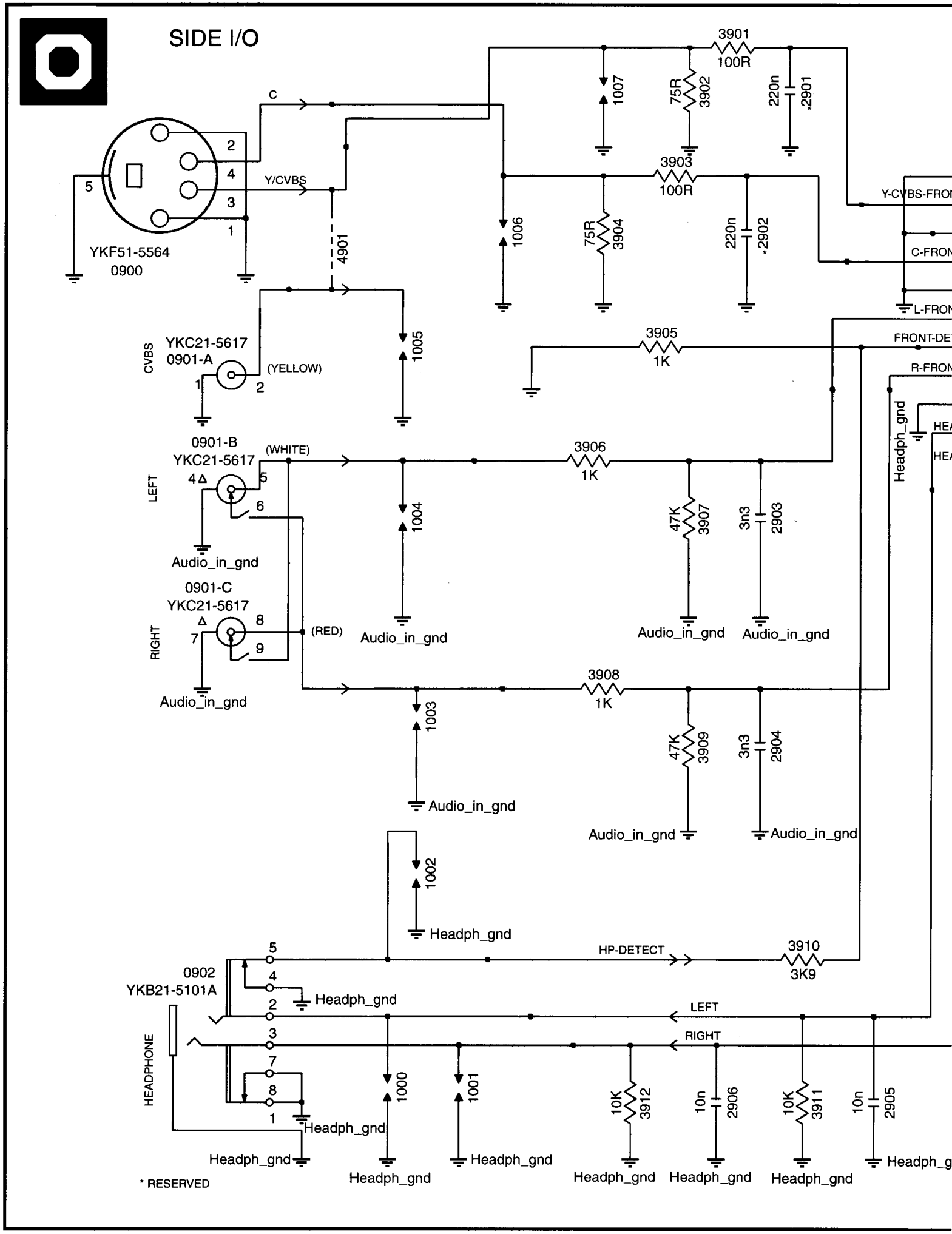
SIDE I/O
YKF51-5564
0900
C
Y/CVBS
4901
1005
CVBS
YKC21-5617
0901-A
(YELLOW)
0901-B
YKC21-5617
(WHITE)
LEFT
Audio_in_gnd
0901-C
YKC21-5617
(RED)
RIGHT
Audio_in_gnd
3901
100R
1007
75R
3902
220n
*2901
3903
100R
1006
75R
3904
220n
*2902
Y-CVBS-FRON
C-FRON
L-FRON
3905
1K
FRONT-DE
R-FRON
Headph_gnd
3906
1K
1004
47K
3907
3n3
2903
3908
1K
1003
47K
3909
3n3
2904
1002
Headph_gnd
HP-DETECT
3910
3K9
0902
YKB21-5101A
HEADPHONE
LEFT
RIGHT
1000
1001
10K
3912
10n
2906
10K
3911
10n
2905
* RESERVED

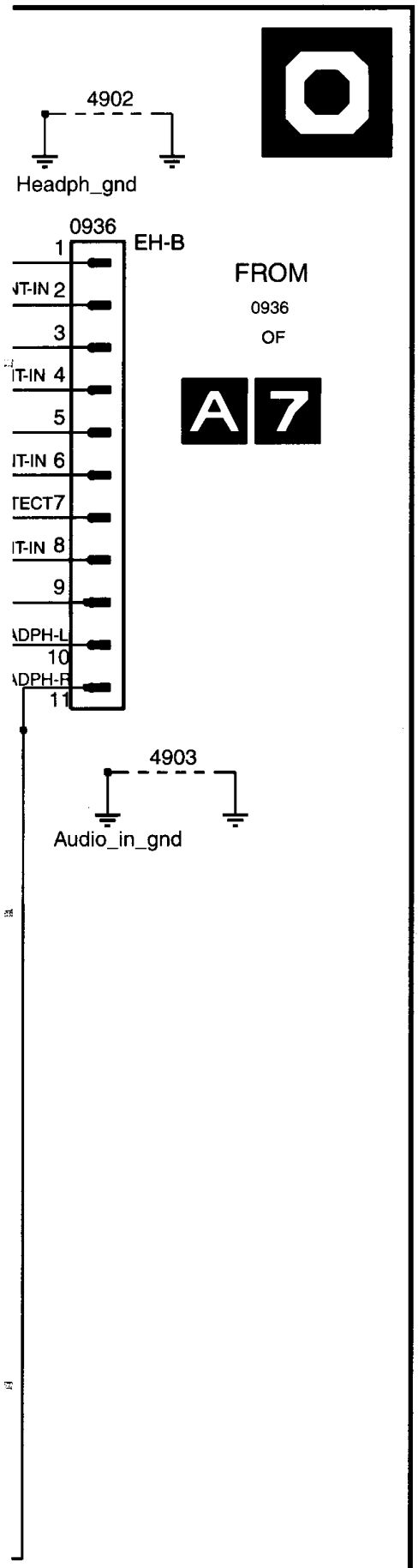

nd

CL96532156_070.eps
110200

8. Electrical alignments

8.1 General alignment conditions

All electrical alignments should be made under the following conditions:

- Power supply voltage: 230 V ± 10 %; 50 - 60 Hz ± 5 %. Should be applied via an isolating transformer with low internal resistance.
- Warm-up time ≈ 20 minutes.
- Voltages and oscillograms are measured in relation to Tuner earth (with exception to the voltages on the primary side of the power supply). Never use the cooling fins/plates as ground: they are 'hot' ! ! !
- Test probe: Ri > 10 MΩ, Ci < 20 pF.
- Use an isolated trimmer/screwdriver for the alignments

8.2 Alignments on the large signal panel (LSP)

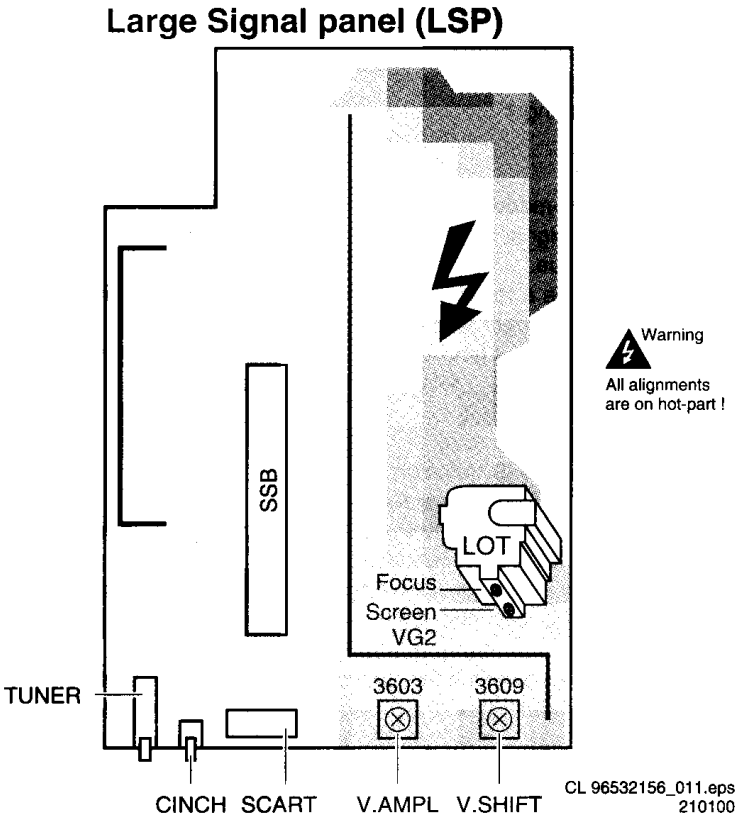

Figure 8-1

8.2.1 Focusing

1. Tune the set to a crosshatch test pattern (use an external video pattern generator).
2. Adjust the Focus potentiometer (upper potmeter, see figure 8-1) for an overall optimum focusing of the picture.

8.2.2 Vg2 adjustment

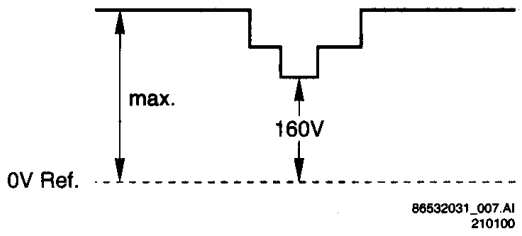

Figure 8-2

Elucidation: In the frame blanking period of the R, G and B signals applied to the CRT, a measuring pulse with different DC levels is inserted by the 'HOP' video processor. Measure the black level pulse during the vertical flyback at the RGB cathodes of the CRT.

1. Put the set in the SDM mode (see chapter 5.2.1).
2. Insert a black test-pattern signal (carrier 475.25 MHz) to the Tuner input.
3. Connect an oscilloscope (position 50 V/Div DC and 2 ms/Div) alternately to the CRT cathodes (Red pin 8, Green pin 6, Blue pin 11) and measure for each cathode the DC level of the measuring pulse (see elucidation above and figure 8-2) and write down each value. Remark: Trigger the scope external via a CVBS signal (for instance via pin 19 of the SCART1 connection).
4. Adjust the Vg2 potentiometer (lower potmeter, see figure 8-1) so that the measuring pulse with the highest noted level is on 160 ± 3 V_{DC} level.

8.3 Vertical amplitude alignment

1. Tune the set to a crosshatch test pattern (use an external video pattern generator).
2. Align the vertical amplitude with R3603 (see Fig. 8-1) so that the complete test pattern is visible.

8.4 Vertical shift alignment

1. Tune the set to a crosshatch test pattern (use an external video pattern generator).
2. Align the vertical centering with R3609 (see Fig. 8-1) so that the test pattern is located vertically in the middle.
3. Repeat the 'vertical amplitude' alignment if necessary.

8.5 Alignments and settings in the Service Alignment Menu

8.5.1 General

Put the set in the SAM mode (see chapter 5.2.2). The Service Alignment Mode menu will now appear on the screen. Via 'Alignments' the following submenu's can be selected:

- General:
  - Drive
  - Luminance Delays
  - EHT Compensation
  - Soft clipper
  - Luma gain
  - IF AFC
  - Tuner AGC
  - Blend intensity
  - Adjust Peak White Limiter
  - Vg2 Test Pattern
- Normal Geometry: General geometry alignments.
- Super Wide Geometry: Geometry alignments for the 'Panorama' position in 16:9 sets (only valid for wide screen sets; alignments can be performed, however, it is better to set values as mentioned below).
- Options: Setting the initialisation codes in the set via text.
- Option Numbers: All options together, expressed in two long numbers. The original factory setting for these numbers can be found on the picture tube sticker on the inside of the set.
- Store: Store all alignments.

The alignments are explained now in the sequence of the sub-menu:

8.5.2 'General' alignments in Service Alignment Menu:

- Once all alignments/settings have been completed the item 'Store' must be selected to record all the values in the permanent memory of the set.
- If the Option codes have been changed and stored, the set has to be switched 'OFF' and 'ON' using the mains switch to activate the new settings (when switching via Standby, the option code settings are NOT read by the microprocessor).
- If an empty EAROM (permanent memory) is detected, all settings are set to pre-programmed default values.
- A built-in test pattern can be called up in various sub-menus. The test pattern generator can be switched on using the item 'Test pattern on/off'. The test pattern only appears AFTER the specific alignment has been selected. The test patterns are generated by the Teletext-IC (OTC).

'Drive'

- Method 1 (with colour analyser):
  1. If you want to align tint-settings with a colour-analyser, the Test pattern must be switched on. You get a white block in middle of the image now.
  2. Before doing the Tint-settings the 'Cathode'-parameter must be aligned. This is dependent of the picture tube size and brand. See table "Cathode parameter" for the colour-analyser readings.
  3. Tint-settings: Set the white levels for the 3 Tint-settings 'Normal', 'Warm' and 'Cool'. The next values must be aligned (see table "White levels").

Cathode parameter	
CRT	Light output (cd/m^2)
25" FS	50,0
28" FS	35,0
29" SF	40,0
28" WS	45,0
32" WS	40,0

White levels			
	Cool	Normal	Warm
X	280	289	303
Y	287	299	314
Temp. (K)	10200	8700	7200

- Method 2 (without colour analyser):
  1. Without having a colour-analyser one can set some parameters. This is the next best solution. The setting-parameters are average values coming from production (statistics).
  2. Before doing the Tint-settings the 'Cathode'-parameter must be set. For all picture tubes the value '5' must be entered.
  3. The 'Tint' setting must be on 'normal'.
  4. Tint-settings: Set the Red, Green and Blue parameters for the 3 Tint-settings 'Normal', 'Warm' and 'Cool'. See table 8.4 for the values.
  5. Red BL offset: herewith the Black Level can be aligned very precise. Pre-set value is 7.
  6. Green BL offset: herewith the Black Level can be aligned very precise. Pre-set value is 7.

Tint settings			
	Cool	Normal	Warm
R	24	25	27
G	20	20	20
B	18	14	10

'Luminance delays'

With the 'Luminance delays' alignment the luminance information is placed on the chrominance information (brightness is pushed onto the colour). Use a colour bar/grey scale pattern as test signal.

- Lum. Delay Pal: Apply a PAL colour bar/grey scale pattern as a test signal. Adjust 'Lum. Delay Pal' until the transients of the colour part and black and white part of the test pattern are at the same position.
- Lum. Delay Secam: Apply a SECAM colour bar/grey scale pattern as a test signal. Adjust 'Lum. Delay Pal' until the transients of the colour part and black and white part of the test pattern are at the same position.
- Lum. Delay Bypass: apply a NTSC colour bar/greyscale pattern as a test signal. Adjust value until the transients of the colour and black & white part of the test area are at the same position.

'EHT compensation'

Fixed setting: 0

'Soft clipper"

Fixed setting:Pwl + 0%

'Luma gain'

Fixed setting:1

'IF AFC'

The SAM-mode is needed to make alignment, a test generator to make signal and the Installation-menu to check the 'Fine Tune' value.
Supply, via a video generator (e.g. PM5518), a TV-signal with a signal-strength of at least 1 mV and a frequency of 475.25 MHz. Use BG if possible, otherwise match the system of your generator with the received signal in the set.

Alignment procedure:

1. Go to the 'Installation' menu.
2. Select 'Manual installation'.
3. Tune the TV-set to the system and frequency described above via 'Search' - '475' - 'OK'.
4. If the frequency showed in the line 'Fine tune' is between 475.18 MHz and 475.31 MHz, you don't need to re-adjust the IF-AFC.
5. If not, adjust the frequency in the 'Fine tune' line to 475.25 MHz and 'Store' the program (this is very important because this will disable the AFC algorythm).
6. Now go to the SAM and select 'Alignments' - 'General' - 'IF AFC'.
7. During the 'IF AFC'-parameter adjustment, one can see OSD feedback in the top of the screen. The OSD feedback can give 4 kind of messages:

AFC-window	AFC-frequency versus reference
Out	High
In	High
In	Low
Out	Low

The first item (In or Out) informs you whether you are in or out the AFC-window.
The second item (High or Low) informs you about whether the AFC-frequency is too high or too low.

1. First you must align the 'IF AFC'-parameter such that you come into the AFC-window (= 'In')
2. Then you must look for the point where the 'IF AFC'-parameter changes from High to Low. This level is the value you are looking for.
3. After adjustment 'Store' the value.
4. Now return to the 'Installation' menu.
5. Select 'Manual Installation' - 'Search' - '475' - 'OK' and 'Store'. This will set the AFC 'on' again.

Service-tip: If you do not trust the accuracy of the frequency of your Service-generator, first 'measure' with 'Fine tune'-line (manual install-menu) of a good set your video generator.

'Tuner AGC'
The SAM-mode is needed to make alignment, a test generator to make signal, a DC-Voltmeter to measure at pin 1 of Tuner.

Supply a TV-signal, with a frequency of 475.25 MHz and a signal-strength of about 2 mV. Measure the DC-voltage on pin 1 of the Tuner (position 1200). With the 'Tuner AGC'-alignment in the SAM-menu, this voltage can be aligned. Alignment is correct when DC-voltage is just below 3.5 V.

'Blend intensity'
(This alignment could be used when micro controller or HOP-IC has been replaced).
It aligns the level of transparency of the menu-picture blended into the main-picture.
1. Position the brightness-, contrast- and colour setting in the middle position (picture-menu).
2. Apply a signal with a 100 % white video-pattern.
3. Connect an oscilloscope to pin 7 of connector 0340 of the CRT panel and measure the Red output level.
4. Align 'blending intensity'-parameter such that the blended signal is 65 % of the black-white amplitude. Practically this will be about 1.3 V (blended signal) versus 2 V (full white signal).
5. The parameter can be adjusted in between 0 and 31.

'Adjust Peak White Limiter'
Depending on the picture-tube size, the next value of the table must be entered:

Peak White Limiter	
25" FS	4
28" FS	4
29" SF	4
24" WS	4
28" WS	4
32" WS	4

'Vg2 Test Pattern'
Here the Vg2 Test pattern can be switched on.

8.5.3 'Normal Geometry' alignments in the Service Alignment Menu

Warning: At this moment, the 'INTERNAL TEST PATTERN' of the set software will lead to a mis-alignment of the picture geometry. Therefor use an external generator with a geometry pattern (e.g. crosshatch) to align the set (only for the 'Vertical slope' adjustment the internal test pattern can be used).

'Vertical slope'
Select 'Test Pattern on' (read warning above).
1. Set the start conditions for 16:9 sets: ~~'V. S-correction' value on 8 for the 28" and on 7 for the 32" set.~~ The boundary-stripes of the test pattern should be positioned on the edge of the picture tube.
2. Align 'V. slope' (when aligning the below half of the picture is blanked). The middle line of the test pattern must be matched with the edge of this blanking/picture transient in the middle of the picture. Pushing 'MENU' button again, gives you previous menu again. (This alignment is meant to align the zero crossing of the frame-deflection to the mechanical middle of the picture tube.)

'Horizontal amplitude and centring'
Use an external pattern generator with a geometry pattern (e.g. crosshatch).
1. Using 'H. amplitude' align the horizontal amplitude so that the entire test pattern is visible.
2. Use an external test signal, with a centre-reference from a service-generator. Use 'H shift' to align the picture horizontally in the middle.
3. Repeat the 'H amplitude' alignment if necessary.

'East/west alignment'
Use an external pattern generator with a geometry pattern (e.g. crosshatch).

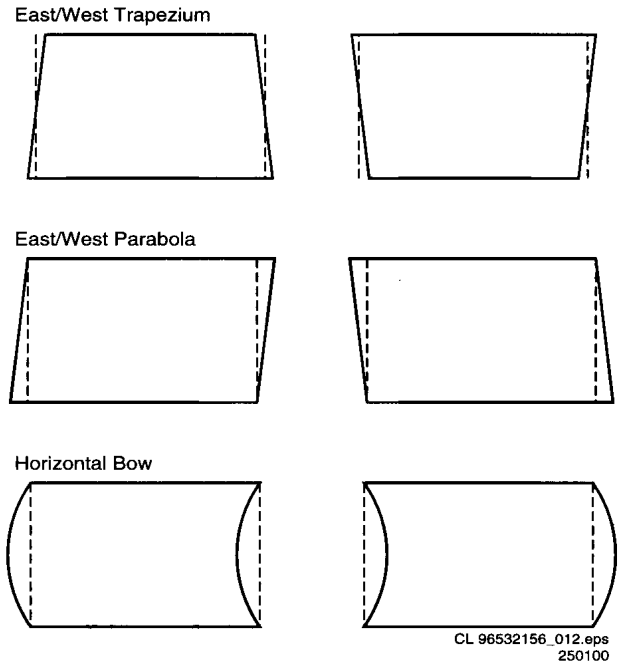

Figure 8-3

1. Use 'East/West Parabola' to align the vertical lines until straight.
2. 'Upper East/West corner' to align the vertical lines in the upper corners until straight.
3. 'Lower East/West corner' to align the vertical lines in the lower corners until straight.
4. Use 'East/West Trapezium' to align for a rectangular.
5. Use 'Horizontal Parallelogram' to align for straight vertical lines if necessary.
6. Horizontal Bow' (neutral value 31. With this alignment the E/W parabola can be corrected such that it becomes symmetrical).

Repeat steps 1 to 6 if necessary.

8.5.4 'Super wide geometry' alignments (for widescreen sets) in the Service Alignment Menu

The header of this paragraph and also the menu's are somewhat misleading. We only need to set the following values (if the normal geometry alignment has been performed correctly):
1. ~~V. S-Correction: enter value of 'normal geometry' alignment.~~
2. H. amplitude: enter value of 'normal geometry' alignment subtracted by 4.
3. East/west Parabola: enter value of 'normal geometry' alignment.

8.6 Option menu

8.6.1 Introduction:

The microprocessor communicates with a large number of I²C-IC's in the set. To ensure good communication and make digital diagnosis possible, the microprocessor has to know which IC's have to be addressed. The presence of specific IC's or functions is made known by means of the option codes.

All options codes can be manipulated using both the option numbers and/or the Option menu.
All hardware related options are incorporated under the heading 'Options' of the 'Alignments' sub-menu of the 'Service Alignment Mode'. All software related options that are incorporated under the heading 'Dealer Options' of the 'Service Alignment Mode", can also be reached directly via the 'DEALER' button of the DST.

8.6.2 Options in the Service Alignment Mode

Menu-item	Subjects	Options	Physically in the set
Dual screen/PIP	Aux type	Yes	Dual Screen / PIP module present
		No	Dual Screen / PIP module not present
Teletext/EPG	TXT	Yes	Teletext present
		No	Teletext not present
	NextView present	Yes	NextView set
		No	NextView not set
	NextView type	Flashram	Flash-RAM present
		No Flashram	Flash-RAM present
Communication	Easylink Plus	Yes	Easylink Plus set
		No	Easylink Plus not set
Picture Tube	CRT Type	4:3	4:3 picture tube
		16:9	16:9 picture tube
	Picture Rotation	Yes	Frame rotation circuitry present (diagram A4)
		No	Frame rotation circuitry not present
	Dynamic focus	Yes	Dynamic focus picture tube present
		No	Dynamic focus picture tube not present
	Dooming prevent	Off	
		4:3	
		SF 16:9	
		RF 16:9	
Video repro	Featurebox type	Eco	PROZONIC not present
		Prozonic	PROZONIC present
	Field memories	2	
		3	
	Lightsensor	Yes	Lightsensor present
		No	Lightsensor not present
	PALplus	Yes	PALplus module present
		No	PALplus module not present
	Combfilter	Yes	Not valid for Europe
		No	
	Picture improvement	Yes	
		No	
	Picnic	Yes	PICNIC present
		No	PICNIC not present
	Picnic AGC	Yes	In normal operation: Yes
		No	During 'Drive' alignments: No
	Signalling bits	Yes	
		No	
Source Selection	External 3	Yes	3rd EURO connector present
		No	No 3rd EURO connector present
	External 4	Yes	4th EURO connector present
		No	No 4th EURO connector present
Audio Repro	Dolby	None	
		Pro Logic	
	Rear speakers	Corded	Passive surroundbox present
		Virtual	
		Cordless	Active surroundbox present
	Acoustic system	FL7	Applicable for sets with subwoofer
		FL8	Applicable for sets without subwoofer
		FL9 Monitor	Monitor look (only tweeters at both sides)
		FL9 DAS	FL9 with full range speakers at both sides
	MSP type	MSP3411	
		MSP3415	
		MSP3451	
	AVL enable	On	
		Off	
Miscellaneous	Heatsink Present	Yes	Heatsink present on CRT/SCAVEM panel (diagram F)
		No	Heatsink not present on CRT/SCAVEM panel (diagram F)
	Tuner type	UV1316	
		TEDE9	

CL96532156_038.eps
210100

8.6.3 Dealer Options in the Service Alignment Mode

- After the option(s) have been changed, they must be stored via the 'STORE' command.
- The new option is only active after the TV is switched off and then back on again using the mains switch (the EAROM is then read out again).

8.6.4 Option number

In case the EAROM has to be replaced, all the options will also require resetting. To be certain that the factory settings are reproduced exactly, both option numbers have to be set. These numbers can be found on a sticker on the picture tube.

Example: Option number 28PT7306/12 could be:
04929 04418 04417 00016
08199 00001 00000 00000

The first line indicates the hardware options 1 to 4, second line is reserved for the software options.
Every 5-digit number represents 16 bits (so maximum number can be 65536 if all options are set).

Bit	HW1	HW2	HW3	HW4	SW1	SW2	SW3	SW4
0 (1)	FBX (1)		EXT3	MSP (8)	Auto TV	CTI		
1 (2)	FBX (1)	Dolby PL	EXT4	MSP (8)	Auto Store mode (10)			
2 (4)	FBX (1)	Virtual rear spkrs		China IF	Auto Store mode (10)			
3 (8)	Combfilter	Cordless rear spkrs		Tuner (9)				
4 (16)	PAL-Plus	Dolby Digital	Dual Screen (6)	TXT	Picture mute			SLDP (13)
5 (32)	Field mem. (2)		Dual Screen (6)	China TXT	Demo			SLDP (13)
6 (64)	Light sensor	Cabinet (4)	TXT-EPG-DS		Virgin			AVL
7 (128)	LTP	Cabinet (4)	Aux-headphone					
8 (256)	PICNiC	P50	Aspect Ratio (7)					
9 (512)	PICNIC-AGC		Tilt					
10 (1024)			DAF					
11 (2048)	LNA (3)							
12 (4096)	WSS	EPG	Heatsink		TXT pref. (11)			
13 (8192)	Time constant	EPG type (5)	Home Cinema		TXT region (12)			
14 (16384)								
15 (32768)								

CL96532156_039.eps
210100

All bits can be set 'On' (= 1) when the option is available or 'Off' (= 0) when it is not, except for:
(1) 0 = Eco, 1 = PROZONIC, 4 = Eco-DNR.
(2) 0 = 2 Field memories, 32 = 3 Field memories.
(3) 0 = Normal, 8192 = Fast.
(4) 0 = FL7, 64 = FL8, 128 = FL9.
(5) 0 = Type 2, 8192 = Type 2C3.
(6) 0 = None, 16 = PIP, 32 = Dual Screen.
(7) 0 = 4:3, 256 = 16:9.
(8) 0 = MSP3415, 1 = MSP3451, 2 = MSP3411.
(9) 0 = Philips, 8 = Alps.
(10) 0 = None, 2 = PDC/VPS, 4 = TXT-Page, 6 = PDC/VPS/TXT-Page.
(11) 0 = TOP, 4096 = FLOF.
(12) 0 = East, 8192 = West.
(13) 0 = Off, 16 = 4:3, 32 = SF16:9, 48 = RF16:9.
When all the correct options are set, the sum of the decimal value (between brackets in 1st column) of each column will give the option number.

9. Circuit descriptions and abbreviation list

9.1 Circuit descriptions

The following circuits are described:
1. Introduction
2. Block diagrams
3. Power supply
4. Control
5. Tuner & IF
6. Video: High-end Input Processor
7. Video: Feature box
8. Video: High-end Output Processor
9. Synchronisation
10. Horizontal deflection
11. Vertical deflection
12. Audio
13. Teletext / NexTView
14. CRT / SCAVEM / Rotation
15. Software related features

9.1.1 Introduction

The EM2E Europe is a lower specified MG-chassis. EM stands for Eco-MG, 2 for the used processor (1 = Painter, 2 = OTC) and E stands for Europe. This will be, at the moment of launch, the cheapest realised 100 Hz set.

The architecture consist of a conventional large signal panel (LSP) and a small signal board (SSB) module, placed into a so called SIMM-connector (Standard Interface, 80 pins).

The LSP is built up very conventional, with hardly any surface mounted components on the copper side. Difference with the MG-chassis is that the EM2E LSP has a very large 'hot' part, including the deflection coil.

The SSB is a high tech module (2 sides reflow technology, full SMC) with very high component density and complete shielding for EMC-reasons. Despite this, it is designed in such a way, that repair on component level will be possible. To achieve this, attention has been paid to:
- The position of service test lands (Tuner side).
- Accessibility (Tuner side).
- Clearance around surface mounted IC's (for replacing).
- Diagnostics & Fault Finding via ComPair.

Due to the low amount of cabling etc., expectation is that the FCR will be low.

Attention: During the first 4 to 6 months of production, the EM2E set-software will be integrated into a flash-RAM on the SSB. After that period, a mask-ROM will be used. Which IC is used is not of interest for service, but for both solutions it means that Service Workshops must be equipped with dedicated (de)solder equipment for exchanging these IC's.
In case flash-RAM or mask-ROM has to be replaced in the field, dealer will receive always an up-to-date flash-RAM.

Warning: Be aware that half of the LSP-circuitry is 'hot', including the deflection coil.

Protection: The start-up behaviour of the EM2E is different then that of the MG-chassis, meaning that there does not exist a situation as in the MG where we have 'supply ON / deflection circuit OFF'.
This means that isolating failures in the EM2E must be done in a different way. See Chapter 5 of this manual.

9.1.2 Block diagrams

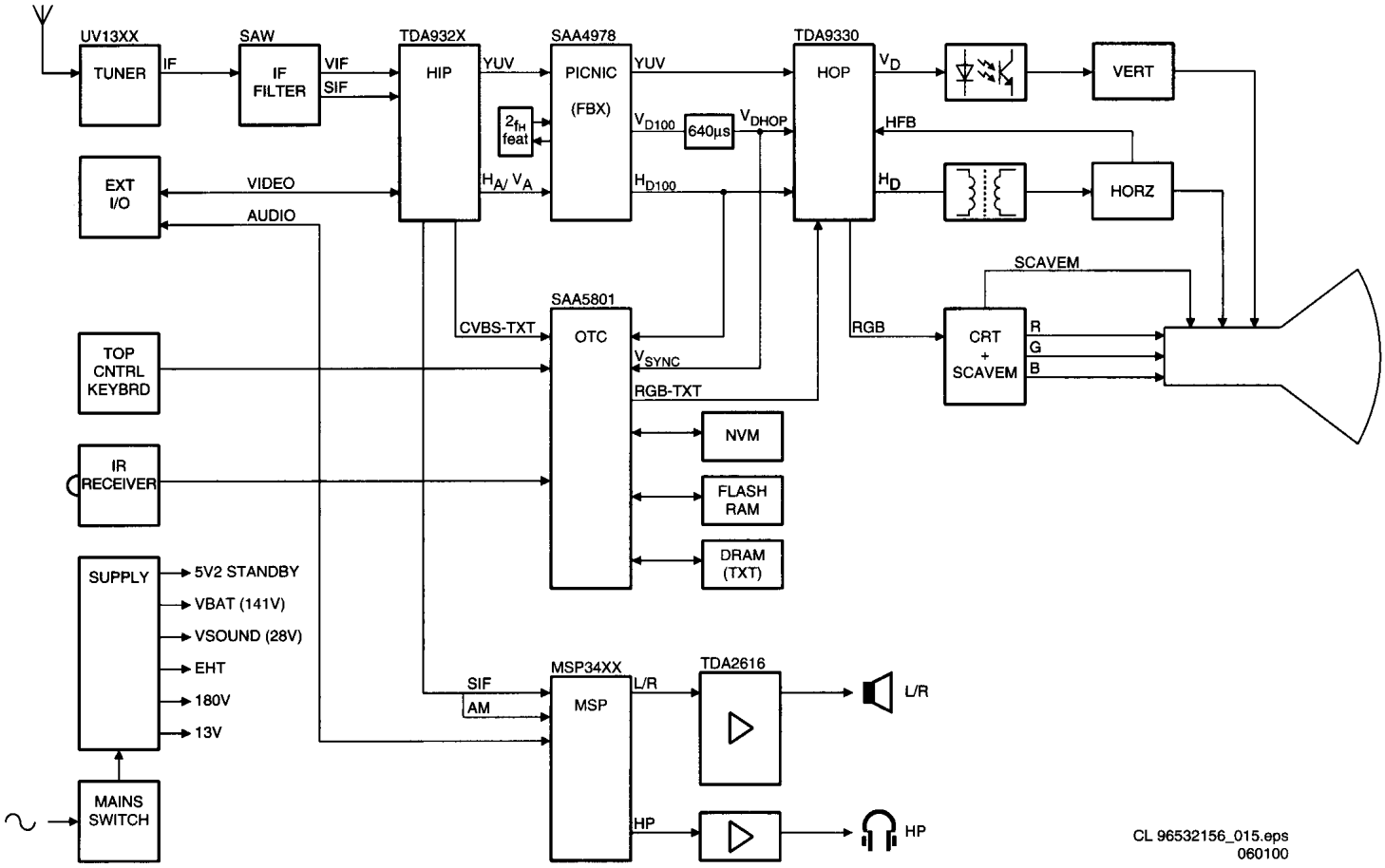

Figure 9-1

The tuner type UV1316 is a PLL tuner and delivers the IF-signal, via audio & video SAW-filters, to the HIP (High-end Input Processor). The HIP has the following functions:

- IF modulation.
- Video source- and record select.
- Colour decoder.
- Synchronisation.

Two SCART-connectors can be used: SCART1 is fully equipped and SCART2 is meant for VCR. Pin 10 of SCART2 is used for Easylink and there is a possibility for Y/C in. The CVBS-out on pin 19 can be used for WYSIWYR (What You See Is What You Record).

The HIP delivers the signal to the PICNIC. This IC takes care of:

- Analogue to Digital conversion and vice versa.
- 50 to 100 Hz conversion.
- Panorama mode.
- Noise reduction.
- Dynamic contrast.

For Digital Scan the PROZONIC is required, which can be connected to the PICNIC. This IC is mentioned as 2fH features in the blockdiagram.

After the PICNIC the, now 100 Hz, YUV- and H/V-signals are fed to the HOP (High-end Output Processor). This IC handles the video control and geometry part. The RGB-signals from TXT/OSD are also inserted via the HOP. The video part delivers the RGB signals to the CRT-panel and the geometry part delivers the H-drive, V-drive and also a drive-signal for rotation (as a variable DC-level on the V-drive signal).

Both deflection circuits are 'hot' and located on the LSP and are driven by the HOP. To make the galvanic separation, the line drive is driven via transformer 5410 and the framedrive via optocoupler 7610.The horizontal output stage generates some supply voltages, the EHT-, focus- and Vg2-voltages.

The RGB amplifiers on the CRT-panel are integrated in one IC and are supplied with 180 V from the LOT.
The SCAVEM circuit modulates transitions of the Luminance (Y) signal on the horizontal deflection current, giving a sharper picture.

The sound part is built around the MSP34xx (Multichannel Sound Processor) for IF sound detection, sound control and source selection. Dolby decoding is also done by the MSP. Amplification is done via an integrated power amplifier IC, the TDA2616.

The microprocessor, called OTC (OSD, Teletext and Control), takes care of the analogue TXT input- and output processing. The OTC, ROM and RAM are supplied with 3.3 V, which is derived from the +5VSTANDBY.
The NVM (Non Volatile Memory) is used to store the settings, the FLASH RAM contains the set software and the DRAM is used for storing the Teletext pages.

In EM2E there is a separate Standby Supply in order to reduce the Standby power consumption. During Standby, the Main Supply is switched off (via TS7529). A relay is used to switch the Degaussing circuit.

The Main Supply, a SMPS based on the 'down-converter' principle, generates the 141 V (V_{BAT}) and the 28 V for the audio part.
Difference with former MG-sets is that V_{BAT} is not mains isolated (is 'hot') and is alignment free.

9.1.3 Power supply (diagram A1 & A2)

General
The power supply has a number of main functions. These functions are dealt with in succession:

- Mains filter
- Degaussing picture tube
- Standby power supply
- Main supply

Mains filter (diagram A1)

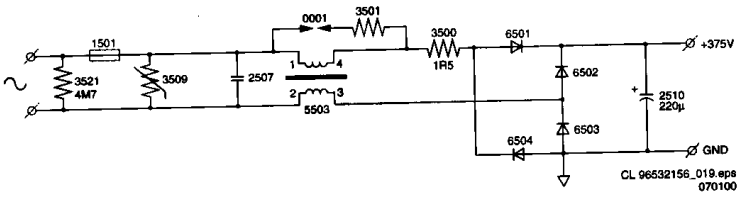

Figure 9-2

The mains filter has 2 functions: it prevents high-frequency signals to be transferred into the mains and it protects the set from lightning damage.

C2507 prevents the high-frequency signals, generated by the set, to be conveyed into the mains by short-circuiting them.

In case of a lightning surge between the 2 phases (differential mode) the energy is immediately bled away through the VDR (R3509) to the other phase.
In case of a lightning surge on both phases of the mains in relation to the aerial earth, the mains filter acts as a high resistance (U_{EMK}=L * dI/dt) as a result of which the voltage across coil L5503/04 increases. A spark gap (0001) prevents that the voltage increases too much, which would lead to a damaged coil. When ignited, the current will be discharged via this spark gap.
The two networks using R3503//0002 and R3502//0003 are also used for lightning protection. They lead the energy of a common-mode lightning surge from the 'cold' to the 'hot' side in case of insertion on the aerial or from the 'hot' to the 'cold' side in case of insertion via the mains-input.
Resistor R3500 is used for limiting the inrush-current.

For 240 V_{AC} mains-voltage applications, jumper 9502 is used. Diodes 6501 to 6504 now work as bridge rectifier charging C2510. For 110 V_{AC} mains-voltage applications, i.s.o. jumper 9502, jumpers 9503 and 9504 are used. Now the diodes will work as a voltage doubler charging C2516 and C2517 (not implemented for Europe).

Degaussing picture tube (diagram A1)
After switching 'ON' the set via the mains-switch, the DEGAUSS_INPUT signal from the processor (OTC) will be made high, transistor 7528 will conduct and relay 1002 will be activated. Initially a considerable current will flow, via PTC 3516, through the degaussing coil. The PTC will heat up, resistance will rise and the current will decay rapidly. The OTC will switch off the relay after 12 seconds.

Standby power supply (diagram A2)
This power supply is of a SOPS type (Self-Oscillating Power Supply) and is regulated by the controlled switching of an oscillator. It uses the so-called 'Flyback' principle:

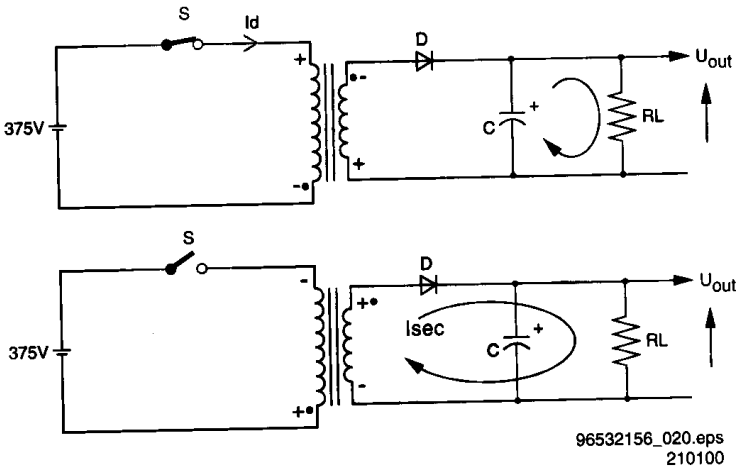

Figure 9-3

- After closing switch 'S', the current I_D will increase linear in time. The magnetic energy in the primary coil is directly proportional with the self-inductance of the coil and current I_D (thus with the time the switch is closed). The voltage polarity at the secondary winding is negative (due to different winding direction), meaning that diode D will block. Capacitor C will discharge via R_L, U_{OUT} will decrease.
- Opening switch 'S' will generate a counter-e.m.f. in the primary winding, trying to maintain current I_D. Through this the polarity of the secondary voltage will inverse. The magnetic energy, stored in the coil, will now be transformed to the secondary side. Diode D will now conduct, capacitor C will be charged and U_{OUT} will increase.

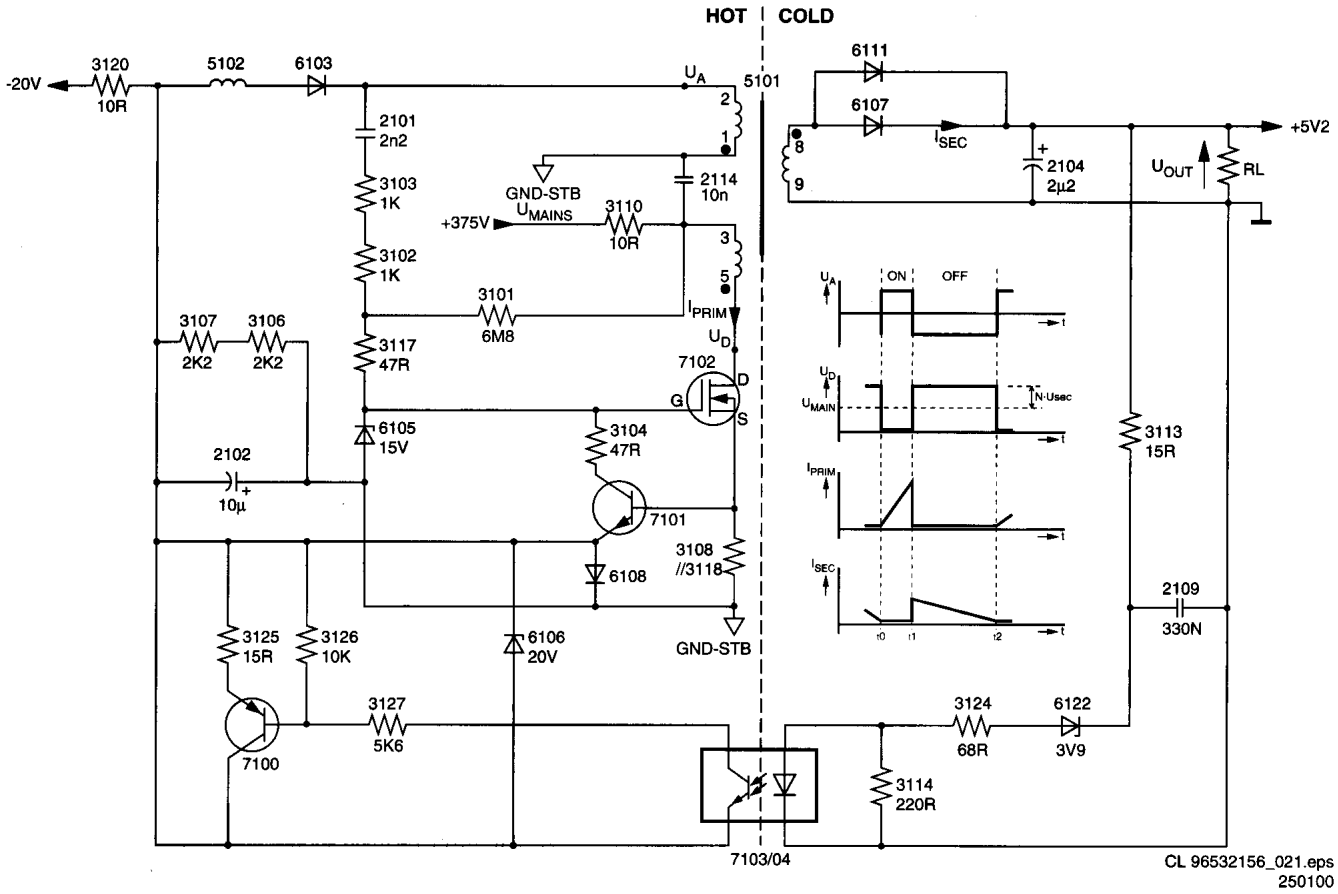

Figure 9-4

To apply this on the EM2E (diagram A2): replace Switch 'S' by FET TS7102, coil L by L5101, diode D by D6107//D6111 and C by C2104.

Time interval t0 - t1:
After switching on the set, the gate of MOSFET TS7102 will be high (max. 15 V due to zenerdiode D6105). This will drive the FET into saturation (U_{DS} = 0 V). The DC-voltage U_{MAINS} will be transposed across the primary winding of L5101 (3, 5) resulting in a linear increasing current through this coil.
The voltage across the co-coupled coil (1, 2) is also positive and will keep the FET into conductivity via C2101, R3103, R3102 and R3117 for some time. The slope of the primary current is determined by the self-induction of the coil and on the magnitude of the supply voltage (+375 V).
The maximum current is determined by the time the FET stays into conductance (t0 - t1). This time is directly determined by the voltage across R3108//R3118. This voltage is a measure of the current and if it exceeds 1.4 V, TS7101 will be driven into conductivity and consequently connect the gate of TS7102 to earth; the FET will block. The current will be: 1.4 V / (15//4.7 ohm) = 0.39 A.
The voltage across the secondary winding (8,9) will be negative, diodes D6111 and D6107 will block.

Time interval t1 - t2:
The sudden current interruption in the primary coil, will induce a counter-e.m.f. that wants to maintain the current. The voltage on the drain of the FET will increase. The secondary voltage (8, 9) will become positive and will charge C2104 via D6107 and D6111. All energy that was stored in L5101 during t0 - t1 will be transferred into the load. Due to the transformer principle, a voltage will now be induced in the primary winding (3, 5) and the co-coupled winding (1, 2). This voltage will be: N * U_{SEC} (N = winding ratio).

The voltage across the co-coupled coil will be negative, keeping the FET blocked.

Time t2:
At t2, the current through the secondary coil will be reduced to zero, as C2104 is no longer charged. As a consequence, the voltages will decay and will change polarity. The gate of the FET will be again made positive, is driven into conductivity and the cycle starts again.

Feedback, stabilisation:
The Standby Power Supply always oscillates at maximum power, the only limiting factor is the maximum primary current which has been pre-set with R3108//3118.
U_{OUT} is determined by R3114, R3124 and zenerdiode D6122. If the voltage across R3114 exceeds the threshold voltage of the diode of the optocoupler 7104 (±1 V) or, in other words, U_{OUT} exceeds 5.2 V, the transistor of the optocoupler will conduct.
Transistor TS7100 will be driven and a negative voltage will be transposed to the emitter of TS7101. When TS7101 conducts, the gate of the FET is at earth potential forcing the oscillator stop. Due to the load, the secondary voltage U_{OUT} will decrease. At a certain voltage, optocoupler TS7103/04 will block and the oscillator will start again.
Since there are no capacitors and there is a high amplification-factor in the feedback circuit, the feedback is ultra-fast. This is why the ripple on U_{OUT} is minimal. The negative supply voltage (-20 V) used in the feedback circuit originates from the co-coupling coil and is rectified through D6103.
Stabilisation is not effected through duty-cycle control but through burst-mode of TS7100.
Burst-mode is load dependent. If the power supply is less loaded, the secondary voltage will have the tendency to increase more rapidly. If the load on the power supply

increases, then the oscillator stops less often, right up to the moment that the oscillator is operating continuously: maximum load. If the power supply is now loaded even more, the output voltage will decay. The maximum load is determined by the maximum primary current set by R3108//3118.

Protection:
If the optocoupler would fail, the secondary voltage will increase. This would have disastrous consequences since many IC's (e.g. OTC, flash-RAM, DRAM) are fed with this 5.2 V. In other words, very expensive repairs would be required. We already know that the negative supply is directly dependent upon the secondary 5.2 V, as a consequence of which the negative supply will increase proportionally as the secondary voltage increases.
If the negative supply in the mean time reaches -30 V, D6106 will start to zener and as a consequence TS7101 will start conducting. Basically, D6106 will take over the stabilisation task of the optocoupler, however, with a considerable spread: from -20 V to -30 V is a 50 % increase, thus U_{OUT} will increase from 5.2 V to max. 7.5 V.

Main supply (diagram A1)

Some important notes on beforehand:
- V_{BAT} is not isolated from the mains supply ('hot').
- V_{BAT} is alignment free.

The Main Power Supply, generates the 141 V (V_{BAT}) and the 28 V for the audio part and is based on the so-called 'down converter' principle.

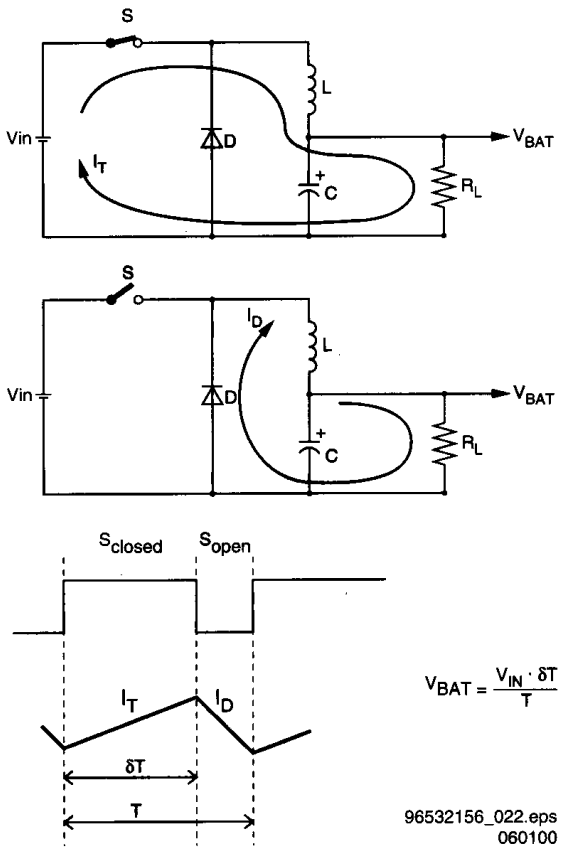

Figure 9-5

- After closing switch 'S', the linear in time increasing current I_T, , will charge capacitor C.
- Opening switch 'S' will generate a counter-e.m.f. in coil L, trying to maintain current I_T. This is possible via diode D (this diode is also called 'freewheel diode'). So after opening 'S', the magnetic energy stored in coil L will be transferred to electrostatic energy in capacitor C. The V_{IN} will only supply current during the time that 'S' is closed while a constant current is flowing through R_L.
- V_{BAT} is directly proportional with V_{IN} and the time that 'S' is closed and reverse proportional with period time 'T'. So by changing the duty cycle, it will be possible to control V_{BAT}.

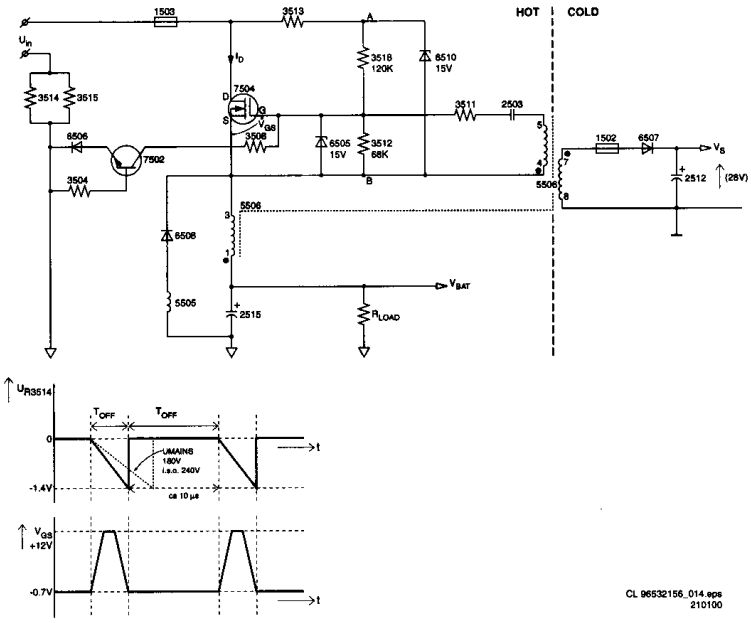

Figure 9-6

At start-up of the main supply, C2515 can be assumed as being a shortcircuit. U_{AB} will be 15 V (R3513, D6510) and U_{GS} of the FET will be +5.4 V (voltage division over R3512 and R3518). The FET will be driven into saturation (same as closing switch 'S'). The drain-current will increase linear in time. With other words: resistors R3513 and R3518 will start the oscillator. The voltage across the co-coupled coil (4, 5) is also positive and will keep the FET into conductivity.

The drain-current will also flow through R3514//R3515. The voltage on the base of TS7502 will be +0.8 V due to the stabilisation circuit (which is explained further). At increasing current, the emitter-voltage of TS7502 will get more negative. When this voltage reaches -0.7 V, TS7502 will be driven into conductivity and consequently connect the gate of TS7504 to earth; the FET will block (same as opening switch 'S'). The maximum drain-current is: 0.7 V / (R3514//R3515) = 1.4 A. The voltage polarities on L5506 will invert, keeping the gate of TS7504 negative via the co-coupled coil (4, 5). The voltage on the secondary winding of L5506 (7, 8) will be positive, generating the +28 V audio supply voltage via D6507 and C2512.

The sudden current interruption in the primary coil, will induce a counter-e.m.f. that wants to maintain the current via the 'freewheel' diode D6508. This current is linear decreasing in time and as it is also flowing through R3414//R3415, TS7502 will be blocked after a certain time period. The gate of the FET will be again made positive, is driven into conductivity and the cycle starts again.

Stabilisation of V_{BAT}:
The output voltage V_{BAT} will be determined by: $V_{BAT} = V_{IN} * T_{ON} / (T_{ON} + T_{OFF}) = V_{IN} *$ duty-cycle.
To stabilise the output voltage, a feedback loop is implemented, which will reduce T_{ON} when V_{BAT} increases and vice versa.

Via a voltage divider, excisting of (1 %) resistors R3507, R3510 and R3527, a voltage of 2.5 V (when V_{BAT} = 141 V) is fed to the input of precision shunt regulator 7506. This regulator will

conduct, a current will flow through R3524 and TS7505 will be driven into conductivity. The base of TS7502 will now be set at a certain positive voltage. As this transistor switches the FET TS7504 on and off, this circuit can determine the dutycycle.

E.g. when the load increases, V_{BAT} will decrease. As a consequence, the input-voltage of regulator 7506 will decrease, resulting in a lower current. Through that the emitter-base voltage of TS7505 will diminish.
The current through R3504 will decline, changing the base-voltage of TS7502 and through that the T_{ON} (will increase) of the FET. The output voltage V_{BAT} will rise.
If the load continues to increase, the regulator will block at a certain moment, the collector-current of TS7505 will now be zero. If there flows no current through R3504, T_{ON} will now be maximum (I_{MAX} = 1.4 A). This is the point where V_{BAT} will be below 141 V, and at further increasing load will be switched off (The voltage across the co-coupled coil (4, 5) will decrease due to the increasing load. Therefore the voltage on the gate of TS7504 comes below the threshold voltage. The supply switches off and an audible hiccuping can be heard).

On the other hand when the load decreases, V_{BAT} will rise. As a consequence, the input-voltage of 7506 will also rise resulting in a higher current. The current through R3504 will rise, changing the base-voltage of TS7502 and through that the T_{ON} (will decrease) of the FET. The output voltage V_{BAT} will be reduced.

If, for instance, V_{IN} will decrease (e.g. U_{MAINS} is 180 V i.s.o. 240 V), the slope of the drain-current will be flattened, through which the FET will be longer into conductance, keeping V_{OUT} constant.

If, for any reason, the stabilisation circuit might fail, the output voltage V_{BAT} can never exceed 200 V (via D6514). D6514 will form a shortcircuit, V_{BAT} will drop and the set will switch off (this will result in an audible hiccuping of the supply).

Set to 'STANDBY" (via RC):
When the set is switched to 'STANDBY' via the Remote Control, the Main supply will be switched off.
This is done by the circuit around TS7529 (see diagram A1):
During 'ON'-state the Main supply is fed with line pulses via the STANDBY line. They are rectified and smoothed via D6517, D6516 and C2530 and fed to TS7529. Because they are less than -20 V, this transistor will be blocked.
When these pulses are stopped (STANDBY), TS7529 will be saturated and TS7502 will be switched off. This will switch off the Main supply.

Set to 'ON' (via 'STANDBY'):
At the moment the set is switched 'ON', the HOP is not working (as much as possible IC's are made voltageless during 'STANDBY'). Therefore it is impossible that the STANDBY line carries line-pulses, so the main supply cannot start up. This problem is solved via the 'low power start-up' possibility of the HOP.
Via pin 22, the HOP receives, via the STANDBY_INFO line from the OTC, a voltage of 5.2 V coming from the Standby supply. The result will be that the HOP will generate pulses with a nominal T_{OFF} and T_{ON} growing from 0 to 30 % of the nominal value.
This signal is unchanged until the Main supply is switched 'ON' and the HOP the correct I^2C-command POR-bit) has received.

Guarding circuit:
The negative pulses on the secondary winding of L5506 are rectified by D6520 and smoothed by C2535. The resulting negative DC-voltage will keep TS7510 blocked, even as TS7511.

When something happens in the Main supply through which these pulses will decrease, the DC-voltage will increase. TS7510 starts to conduct, even as TS7511. Via R3541 and D6522 this situation will be maintained (thyristor principle). The collector of TS7511 drives via R3538 a positive pulse back to the OTC (named STANDBY(POR)). The OTC will now switch off the Main supply via the STANDBY_INFO signal.

SSB
There are 5 different voltages located on the SSB: +33 V, +11D V, +8 V, +5.2 V and +5 V.
+5.2 V is the Standby voltage, it should always be present. The 8 V is derived from the 11D V with stabiliser 7906. The 11D voltage is only present when the line-drive pulses start the deflection.
The 8 V is used to switch the +5.2 V with transistor 7905 to supply the +5 V.

9.1.4 Control (diagram B5)

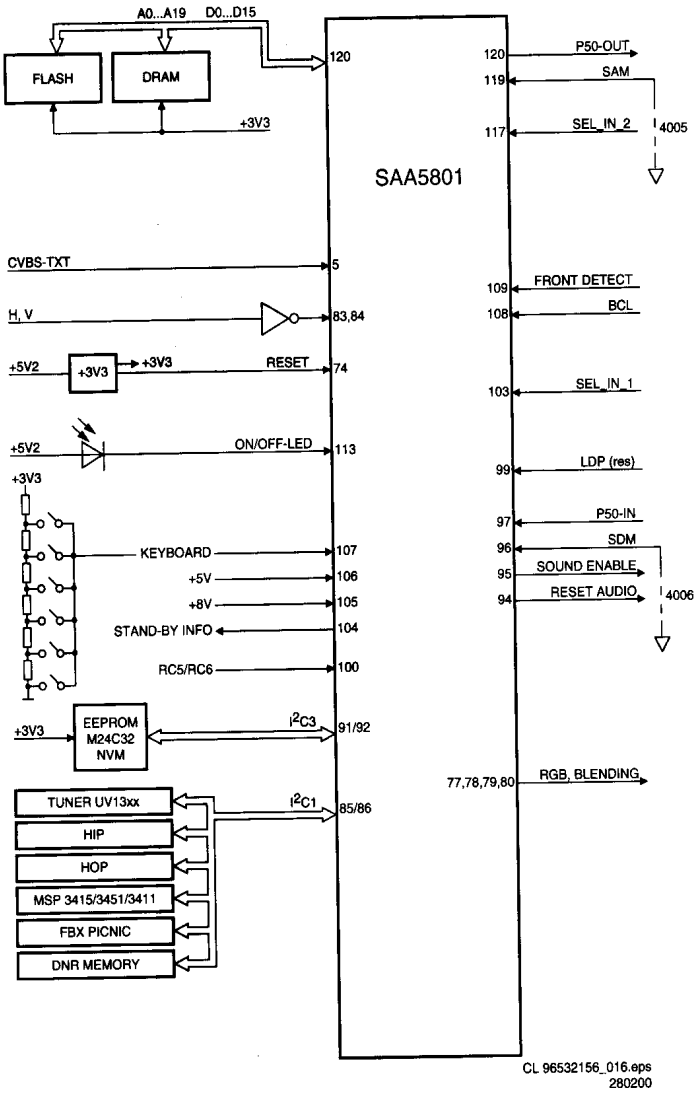

Figure 9-7

OTC

The SAA5801 (IC7001) is called the OTC (OSD, TXT and Control). In this IC, the microprocessor and the TXT-decoder (level 2.5) are integrated.
Some of its functions are:

- Set control.
- TXT/OSD acquisition.
- RGB-outputs to the HOP
- Menu blending; for blending the contrast is software controlled.
- I/O-ports for I²C, RC5, LED, and service modes.
- Error code generation.

The software for EM2E can be 2 MB (Megabyte).
For TXT-data 1000 pages can be stored in IC7007. This is a DRAM of 4 Mbit and this IC is also used to store data of a working set.
The Non Volatile Memory IC7011 is a 4 kB version M24C32W6.

All ICs in this part are supplied with 3V3. For this voltage a 3V3 stabiliser is used (IC7005).
When the 3.3 V is available, a POR is generated with TS7003/7004 to wake up the OTC. During the reset all I/O pins are high. When a POR is generated the TV-set is in Standby mode.

Via pins 105 and 106 the 8 V and the 5 V are sensed. If one of them is not present, the Main supply is switched off (set in protection and the red LED will blink at 3 Hz). The OTC will generate an error code to indicate what was wrong.

The horizontal (HD100) and vertical (VSYNC) sync pulses are also fed to the OTC for stable OSD and TXT.

The RGB-outputs (77/78/79) together with fading (pin 80) are fed to the HOP. The fading pin has a double function: it is used for making a transparent menu and as fast-blanking signal for TXT.

I²C-busses

In the EM2E-chassis with OTC-processor there are two I²C-busses used:

- Slow (max. 100 kHz) hardware I²C-bus (called I²C1), used for all IC communication.
- Separate short bus (called I²C3) for the Non Volatile Memory (NVM) to avoid data corruption.

NVM

The Non Volatile Memory contains all set related data that must be kept permanently, such as:

- Software identification.
- Operational hours.
- Error-codes.
- Option codes.
- All factory alignments.
- Last Status items for the customer + a complete factory recall.
- Txt featuring (keeping habit watch data).
- EPG data.

9.1.5 Tuner & IF (diagram A7 & B2)

The tuner UV1316 is I²C-controlled and is capable of receiving off-air, S- (cable) and Hyperband channels:

- Low 44 - 156 MHz
- Mid 156 - 441 MHz
- High 141 - 865 MHz

The tuning is done via I²C. The reference voltage on pin 9 is 33 V. This voltage is derived from the 180 V (from the LOT) via a resistor of 120 kΩ and a zenerdiode. The OTC together with the HIP control the tuning procedure. There is also automatic switching for the different video systems.

The IF-filter is integrated in a SAW (Surface Acoustic Wave) filter. The type of this filter is depending of the standard(s) that has to be received. Two SAW filters are used: One for filtering picture-IF and the second-one for sound-IF. An extra filter (5403), tuned at 40.4 MHz, is necessary for L/L' sets with 6.5 MHz sound to suppress the neighbour channel.

The output of the tuner is controlled via an IF-amplifier with AGC-control. This is a voltage feedback from pin 62 of the HIP to pin 1 of the tuner. AGC take-over point is adjusted via the service alignment mode 'Tuner AGC'. If there is too much noise in the picture, then it could be that the AGC setting is wrong. The AGC-setting could also be mis-aligned if the picture deforms with perfect signal. The IF-amplifier amplifies too much.

The video IF-signal is fed to pins 2/3 of the PLL-controlled IF-demodulator. The voltage controlled oscillator of the PLL is adjusted via the service menu 'IF AFC'. If the alignment is correct then the displayed frequency in the installation menu is the same as the applied frequency from a generator. The external coil L5408 connected between pins 7/8 is used as reference. The demodulated IF-video signal is available at pin

10 of the HIP. In this video signal there is a rest of sound carrier, which is filtered by the sound trap 1407.
Then the signal is again fed to the HIP on pin 12 where the group delay can be corrected, dependent on the standard that is received. On pin 13 the CVBS-signal becomes available which is used for further processing in the television. Via TS7322 the signal is supplied to EXT1 and back into the HIP on pin 14 to the source/record selection.

To realise quasi split sound the IF-signal is fed to the HIP on pin 63/64 via SAW-filter 1405. The FM (or AM for L-norm) - modulated signal is available on pin 5 and is fed to the audio demodulator MSP34xx.

9.1.6 Video: High-end Input Processor (HIP, diagram B2))

In the EM2E the TDA932xH input processor is used, which contains the following functions:
- IF demodulation.
- Group delay correction.
- AFC signal generation, used to track drifting transmitters.
- Sound carrier re-generation (SIF).
- AM demodulation.
- Sync acquisition, delivering HA and VA.
- Switching off IF-filtering.

The HIP has various inputs.
- Full matrix switch with:
  - 2 CVBS inputs
  - 2 Y/C (or additional CVBS) inputs
  - 1 CVBS front end input
- Two RGB inputs and 2 status-inputs

Outputs: Three separate switchable outputs can be used:
- 1 YUV-output is fed to the PICNIC
- 2 CVBS outputs: One for Teletext Dual Screen and the other for output to EXT2 to have WYSIWYR (What you see is what you record)

I/O-switching: The external signals are fed directly to the I/O part of the HIP with status from pin 8 of SCART. On the HIP there are two status inputs available (pins 15, 17) with two voltage levels:
- 4:3 -> 2.2 V
- 16:9 -> 5.5 V

The input signals from the Front I/O are fed to the HIP and front detection is also fed to the OTC.
EXT1 is full SCART: thus CVBS and RGB. The RGB-selection is done in the HIP.
EXT2 is meant for VCR and has therefore some additional signals in relation to EXT1 but no RGB. EXT2 has also the possibility for Y/C_in and Easylink-Plus (P50). Y_in is with pin 20 and Chroma in with pin 15. Easylink is handled via pin 10 of the SCART and this is a bi-directional communication.

Easylink supports the next features:
- Signal quality and aspect ratio matching
- One touch play
- One touch text
- PIP
- Pre-set download
- WYSIWYR
- Automatic Standby

With Easylink-Plus is added:
- Country and language installation
- System Standby
- Intelligent set top box features
- NexTView download
- Timer record control
- VCR control feature

Video processing
The sandcastle-pulse of the HIP will not be used for synchronisation. The HOP will generate synchronisation signal derived from the feature box (PICNIC) signals. If a VCR is connected, there is also an automatic correction for Macrovision. This is active for the external sources and the pre-sets 0, 90-99.
The HIP itself (no external voltage) controls the Y/C switch in the HIP.
The chrominance decoder in the HIP is full multistandard: PAL/SECAM/NTSC.
Two different crystals can be connected to the pins 54 & 57 without any alignment. The crystals are also used as a reference for the synchronisation. A digital control circuit that is locked to the reference signal of the colour decoder determines the start-up of the sync. This crystal may only be replaced by the original one. If just a crystal is taken, the internal capacitance will be different and the effect will be that there is no colour.
In the HIP a sync separation has been integrated; the HIP delivers the HA and VA 50Hz/60Hz to the PICNIC. On pin 59 there is the 1fH sandcastle but this is not connected to any circuit and only used internally for the colour demodulator. The 2fH-sandcastle signal is generated by the HOP.

9.1.7 Video: Feature box (PICNIC, diagram B3))

Introduction
The basic function of the Feature box (FBX6) is picture improvement, and depending on the version, several scan conversion methods can be applied. The PICNIC (SAA4978H) is the central key component.
In the EM2E-chassis the featurebox is integrated on the SSB. The PICNIC is used for the 100Hz conversion. In the PICNIC the following functions are present:
- The ADC.
- The DAC.
- The 100 Hz conversion.
- The Panorama mode.
- The noise limiter (DNR).
- The contrast improvement.

All these functions are integrated in one IC: SAA4978H, 160 pins QFP

ADC/DAC
Analogue to Digital conversion is done with three identical 9-bit ADC's.
Digital to Analogue conversion uses three identical 10-bit DAC's.
In the PICNIC there are three 9 bits ADCs present for Y,U,V. For digitising the Y (luminance) 9 bits are used, to realise a more detailed picture. The 9 bits are only internally used. Via dithering the 9 bits are reduced to 8 bits and that data is stored into the memory. The data in the memory is fed back to the PICNIC and via undithering the data is again reproduced 9 bits for processing.
U/V (colour difference signals) is also sampled with 9 bits. These two 9 bit data streams are multiplexed to 4 bits data streams. This reduction can be allowed, as the perception for colours by the human eye is less sensitive as for luminance.

100 Hz conversion
The main task of the PICNIC is the conversion from 50Hz to 100Hz for YUV and HV-sync. In order to remove 'large area flicker' (especially visible in a white picture), the field-rate of the video is doubled by the FBX6. A 50/60 Hz frame frequency is converted to 100/120 Hz. Also the line frequency (16 kHz) is doubled (32 kHz). Basically, when the video input contains fields A, B etc..., the conversion provides an AABB sequence on the display. The actual conversion is done in the first Field Memory by reading it twice at double speed, while writing it once.

PROZONIC

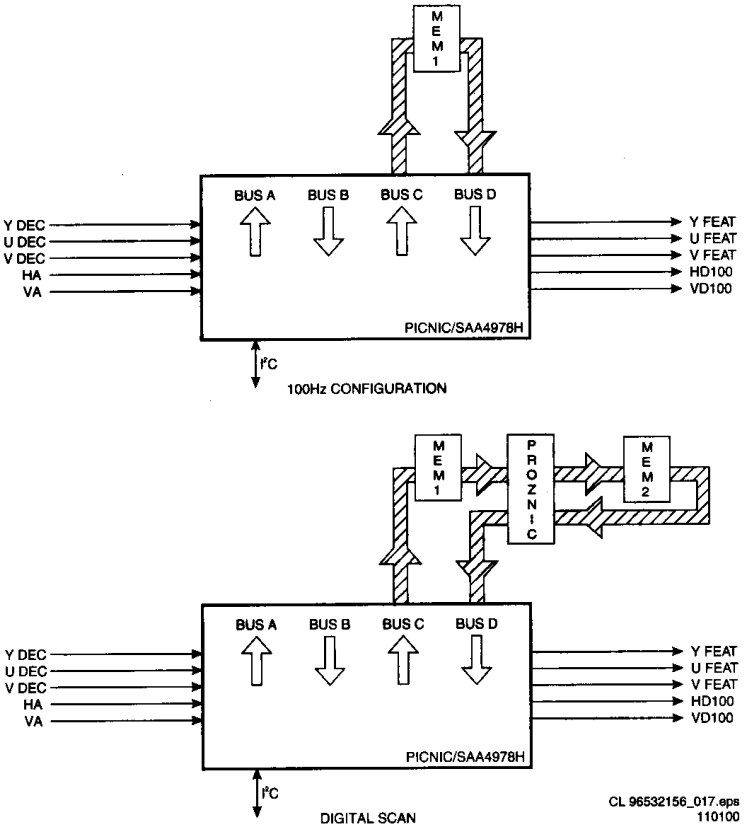

Figure 9-8

To the PICNIC external IC's are connected dependent of the features.
If EM2E has only 100Hz then only one memory-IC is used to store one frame.
For sets with Digital Scan the PROZONIC (IC7708, SAA4990H) has been added with two memory-ICs (IC7714/7715). It is an abbreviation for PROgressive scan Zoom and Noise reduction IC.
When applying this, the 2nd Field Memory has to be installed.
The following functions are available:

- Line flicker reduction (Digital Scan): this is a feature to reduce the 25 Hz interlace line flicker.
- Dynamic Noise Reduction: noise affected signals can be improved by combining the pixel values of the current and past video fields. This is however only possible in areas without movement.
- Variable Vertical Sample Rate Conversion
- Synchronous No Parity Eight bit Reception an Transmission interface (SNERT-bus)

Depending on the chassis model, the FBX6 can have the following specification:

Featurebox 6 diversity	
Set	Chipset
EMG 1fH	
EMG 2fH	1 Memory
EMG 2fH DNR	1 Memory incl. DNR
EMG 2fH Dig. Scan	PROZONIC + 2 Memories

Dual Screen compression
The PICNIC can provide horizontal video compression up to 50 %. The compress mode can be used to display dual screens for instance with Teletext (only for widescreen sets).

Panorama
To fit 4:3 pictures into a 16:9 display, a panoramic horizontal distortion can be applied to make a screen-fitting picture without having black sidebars or lost video.
The centre horizontal gain is programmable and the side gain is automatically adapted to make a screen-fit.

Automatic Aspect Ratio Adaptation (AARA)
This feature uses data from the 'black bar detection circuit' to adapt the vertical and horizontal amplitude to an aspect ratio belonging to the display without showing the black bars.

CTI
At CVBS video signals, the bandwidth of colour signals is limited to 1/4 of the luminance bandwidth. Transients between areas of different colours are therefore not very sharp. The PICNIC can steepen these transients artificially with a time manipulation algorithm.

Dynamic Contrast
To make the contrast (black/white) range wider, Philips has invented Dynamic Contrast. It uses the digital memory used in 100 Hz sets. It measures every A-field (25x/s) and digitally analyses where on the greyscale most of the image is located. If it's a relatively dark image, the lighter part of that image is stretched towards white, so that more contrast will become visible in that picture. If it's a relatively light image, the darker part of that image is stretched towards black, so that these darker parts will have more contrast. When the image is in the middle of the greyscale, both dark and light parts are stretched.

9.1.8 Video: High-end Output Processor (HOP, diagram B4)

General
In the HOP (High-end Output Processor, TDA9330) the video processor and digital deflection processor are integrated. The main functions of the HOP are:

- Video control (contrast, brightness, saturation, etc.).
- 2nd RGB interface for OSD/TXT.
- Peak White Limiting.
- Cut-off control and White Drive (RGB outputs).
- Geometry control.

The YUV-signals from the PICNIC are fed to the HOP. In the HOP, the video and geometry control parts are integrated. Also the RGB-signals from TXT/OSD are inserted via the HOP. This IC has all functions from a video processor and geometry control (like the DDP in MD2). The geometry part delivers the H-drive, EW-drive and also a drive signal for rotation. The internal V-drive circuit of the HOP is not used (is explained further on).

Video Control
After conversion to RGB again, the signals can be controlled for Saturation, Contrast and Brightness.

2nd RGB interface for OSD/TXT
On pins 35 - 38 the RGB and fast blanking from the OTC (OSD and TXT) are inserted.

Peak White Limiting
On pin 43 there is a Peak White Limiting signal line (PWL). If the beam current (EHT-info line) increases, then the EHT-info voltage will decrease. PWL is controlled by average limiting via R3343/C2333.

Cut-off control
Switching the TV to Standby:

1. Vertical scan is completed.
2. Vertical flyback is completed (the horizontal output is gated with the flyback pulse, so that the horizontal output transistor cannot be switched on during the flyback pulse).
3. Slow stop of the horizontal output is started, by gradually reducing the 'on' time at the horizontal output from nominal to zero (this will take 50 ms).

4. At the same time the fixed beam current is forced via the black current loop for 25 ms. This is done by setting the RGB outputs to a maximum voltage of 5.6V.

In the EM2E a 'one-point' cut-off control is used:
A current of 8 µA (for cut-off) is fed to pin 44 of the HOP. This is done with a measurement pulse during the frame flyback. During the 1st frame, 3 pulses are generated to adjust the cut-off voltage at a current of 8 µA.With this measurement the black level at the RGB-outputs is adjusted. So at start-up there is no monitor pulse anymore. At start-up, the HOP measures the pulses which come back via pin 44. The RGB-outputs have to be between 1.5 V and 3.5 V. If one of the outputs is higher than 3.5 V or one of them lower then 1.5 V, the RGB-outputs will be blanked.

Geometry control
All geometry control is done via I^2C and the data is stored in the NVM (IC7011) of the SSB.

Line drive (LINEDRIVE1).
Line drive is derived from an internal VCO of 13.75 MHz. As a reference an external resonator is used (1301). The internal VCO is locked with the HD100-pulse, which comes from the PICNIC. The 'PHI-2' part in the HOP receives the HFB_X-RAY_PROT (pin 13) to correct the phase of the line drive. The EHT-info is supplied to pin 14 (DYN-PHASE-CORR) to compensate picture breathing depending on the beam current. Service tip: This is not used at the moment, therefore EHT-compensation in the service menu is put to zero.

Frame drive (FRAMEDRIVE+).
The VD100 signal from the PICNIC will be extended for 16.5 lines by the circuit around TS7309 and 7311. The resulting signal (VDHOP) will drive TS7310. This will result in the (asymmetric) FRAMEDRIVE+ signal.
Note: The Frame outputs (pins 1/2) of the HOP are not used!

East/West drive.
At pin 3 the E/W-drive is available. Pin 4 is a feedback input for the EHT-info and is used to prevent pumping of the picture. EHT varies also dependent of the beam current. For widescreen without load this is 31.5 kV and with load (1.5 mA) 29.5 kV.

Frame rotation (only for 16:9 sets):
For frame rotation a control voltage is used from pin 25 of the HOP. This voltage can vary from 0.4 V till 4 V.

Guarding protections:
- Flash detection:

When a flash occurs, the EHT-info will become negative very fast. Via D6303/D6304/R3316, TS7303 starts to conduct. This makes pin 5 of HOP high. When pin 5 of HOP is high, then the output (pin 8) is immediately stopped. If H-drive stops then also pin 5 will be low again, which will reset the flash detection. A bit (FLS) will be set in an output status register, so via the OTC it can be seen when there was a flash. This FLS-bit will be reset when the OTC has read that register.
- HFB protection:

If the HFB is not present then this detected via the HOP. The OTC puts the TV into protection and reads a register in the HOP. An error code will be generated.

9.1.9 Synchronisation (diagram B3 & B4)

The HIP video processor provides vertical and horizontal sync pulses VA and HA that are synchronised with the incoming CVBS signal. These pulses are fed to the PICNIC where they are doubled to be synchronous with the 100 Hz picture. The outgoing pulses, VD100 and HD100 are fed to the HOP that supplies the vertical and horizontal drive pulses and the 100 Hz (2fH) sandcastle pulse.

The VD100 pulse from the PICNIC is only one line long. Therefore this pulse is converted into a VDHOP signal by a 530 µs monostable oscillator (extended by 16.5 lines). This signal is on block function level equal to VSYNC and FRAMEDRIVE+.

The OTC is synchronised on the HD100 pulse from the FBX and on the VSYNC for the synchronisation of TXT/OSD/EPG

When no CVBS is offered to the video processor, the VA and HA pulses are switched off by the HIP, and the VD and HD pulses are then generated by the PICNIC. This to assure a stable OSD.

9.1.10 Horizontal (line) deflection (diagram A3)

Driving the line output stage

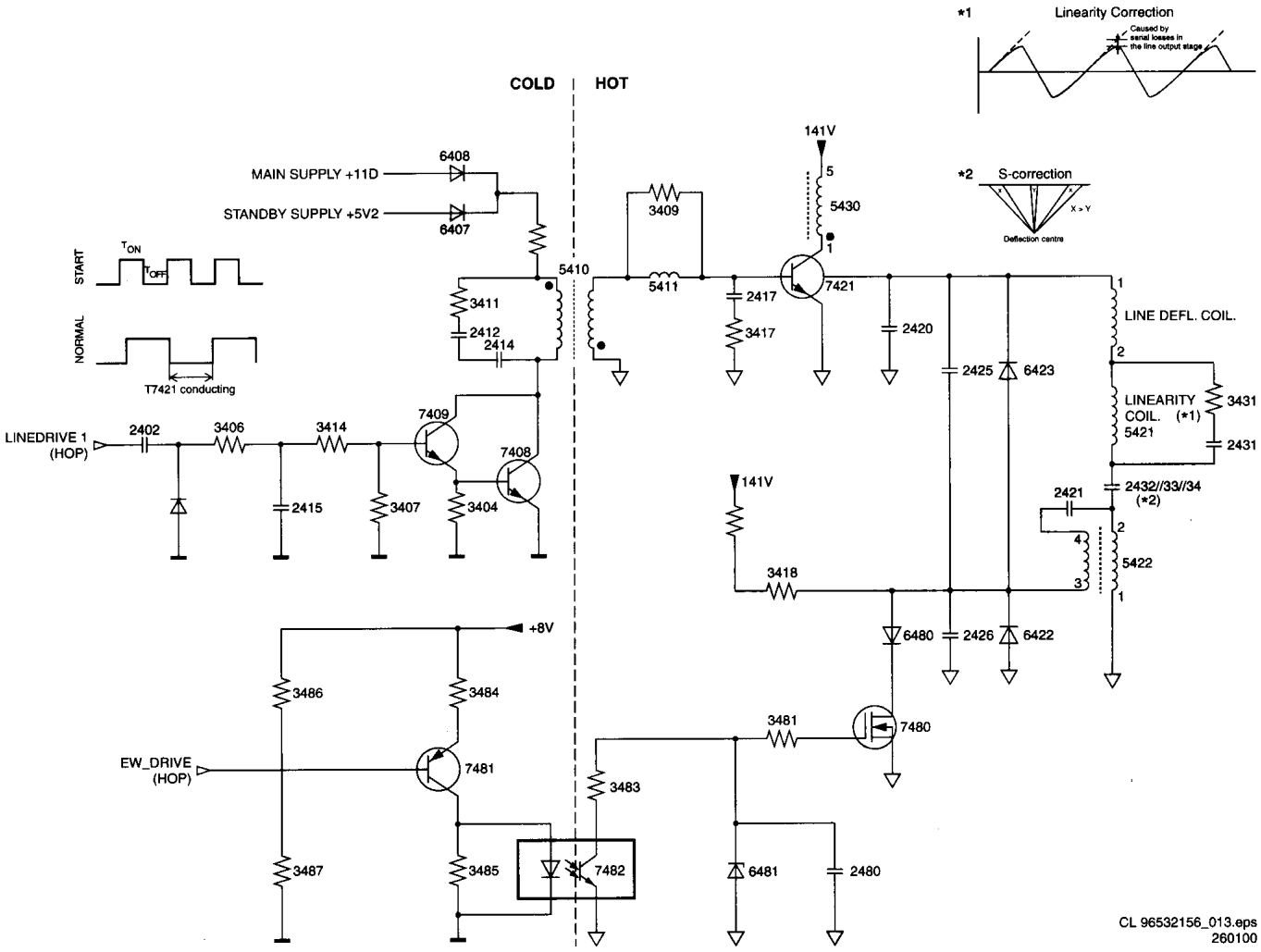

Figure 9-9

The HOP (located on the SSB) generates the line-drive pulses (LINEDRIVE1), which have a frequency of 31250 Hz (T = 32 µs).

When the LINEDRIVE1 signal is high, TS7409 and TS7408 will conduct. A constant DC voltage will be applied across L5410, causing a linear increasing current through this coil. The secondary voltage of L5410 has a negative polarity so that TS7421 will block. When switching on the set, the current through L5410 is supplied by the 5V2 Standby supply (via D6407), and taken over by the +11D voltage (via D6408) of the main supply.

When the LINEDRIVE1 signal becomes low, TS7409 and TS7408 will block. The voltage polarity across the primary winding of L5410 will invert. The positive voltage on the secondary winding will now drive TS7421 into conductivity. Because of the storage time of the line transistor (TS7421), L5410 cannot transfer its energy immediately to the secondary side. This may result in high voltage peaks on the collector of TS7409 and TS7408. To prevent that these peaks will damage the transistors, a 'snubber' circuit (C2414, C2412 and R3411) will suppress them.

When the LINEDRIVE1 signal is high again, the above-described sequence starts again. Circuit L5411 and R3409 will increase the switch-off time of the line transistor.

The line stage will be started via the 'slow start' principle. During start-up, the HOP generates line drive pulses with a small T_{ON} and a high frequency (50 kHz); T_{OFF} will be constant and T_{ON} will be gradually increased until the duty-cycle is 50 % (normal condition). The time interval from start to normal condition takes about 150 ms. When switching off, the same procedure is followed, but now in reverse order.

Operation of the line output stage

To explain the operation of the line output stage, we use the following start conditions:

- C2433 is charged to max. 141 V (V_{BAT})
- TS7421 is driven into conductivity.

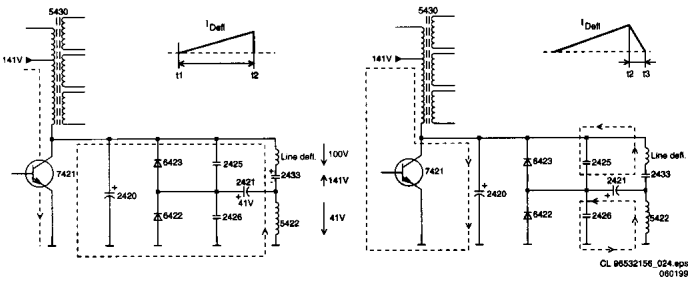

Figure 9-10

Period t1 - t2:
When TS7421 is driven into conductivity, the capacitor voltage of 141 V, will be divided across bridgecoil L5422 and the deflection coil (conn. 0317). Due to the chosen inductance values, there will be 100 V across the deflection coil and 41 V across L5422. The linear increasing current in the deflection coil will result in a spot moving from the centre of the picture tube to the right.
The voltage across L5422 will also charge C2421 (41 V - 0.7 V).

Period t2 - t3:
At the moment the LINEDRIVE signal becomes high, TS7421 will stop conducting. In the coils a voltage will be induced, trying to maintain the current. The current through the line deflection coils continues to flow through C2425 and C2421 and the current through L5422 continues to flow through C2426 and C2421. The energy stored in the line deflection coil is passed to C2425, and the energy of L5422 to C2426.
The resonance-frequencies of these 2 LC-circuits define the flyback time of the spot from the right side of the picture tube to the left.
On average no current flows through C2421 and thus the voltage across this capacitor remains constant.

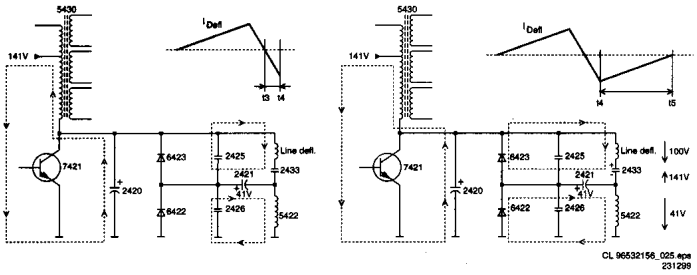

Figure 9-11

Period t3 - t4:
As for the period t2 - t3; but now the current flows in the opposite direction, since the voltage across C2425 and C2426 is higher than the voltage across C2433 and C2421.

Period t4 - t5:
The coils want to maintain the negative current and will charge the capacitors negative. Because of this, D6422 and D6423 will conduct. The voltage is 100 V across the deflection coil and 41 V across L5422. As both diodes conduct, we may consider the voltage to be constant. A linear current flows with the same changing characteristics as in period t1 - t2. The spot now moves from the extreme left of the picture tube to the centre. Before the current becomes zero, and the spot is located in the centre of the frame, TS7421 reverts back into conductivity. First a short negative current will flow. The cycle starts again.

The linearity correction
A constant voltage across the horizontal deflection coil should result in a linear increasing saw-tooth current. This however is not the case as the resistance of the coil is not negligible. In order to compensate for this, a pre-magnetised coil L5421 in series with the deflection coil is used. This coil ensures that during time interval t1 - t3 the circuit-resistance will be higher than during t4 - t5. L5421 is called the linearity coil.
To avoid self-oscillation, R3431 and C2431 are placed parallel to L5421.

The S-correction
Since the sides of the picture are further away from the point of deflection than the centre, a linear saw-tooth current would result in a non-linear image (the centre would be scanned slower than the sides). To solve this, the deflection current for the right- and left side will be reduced.
C2433 is charged quadratic during time interval t1 - t2. Left and right the voltage across the deflection coil decreases, causing the deflection to slow down. In the centre, the voltage increases and the deflection will be faster. An S-shaped current will have to be superimposed onto the saw-tooth current. This correction is called finger-length correction or S-correction. C2433 is relatively small, as a result of which the saw-tooth current will generate a parabolic voltage with negative voltage peaks.. The current also results in a parabolic voltage across C2421, resulting in the finger-length correction, proportionally increasing with the picture width. The EW-DRIVE signal will ensure the largest picture width in the centre of the frame. Here the largest correction is applied. The larger the picture width, the higher the deflection current through C2433.

The E/W-correction
A line, written at the upper- or lower side of the screen, will be larger at the screen centre when a fixed deflection current is used. Therefore the amplitude of the deflection current must be increased when the spot approaches the screen centre. This is called East/West correction.
The EW-DRIVE signal is generated in the HOP and will drive FET TS7480 via TS7481 and optocoupler TS7482. TS7480 will charge capacitor C2423 more or less, increasing the deflection current when reaching the centre of the screen.

Secondary line-voltages
During the blocking time of TS7421, the magnetic energy of coil 1 - 5 of the LOT will be transferred to electrical energy in the secondary winding. Via rectifying and smoothing, the several secondary supply voltages will be generated:
- EHT, Focus and Vg2-voltage
- +180V for the CRT panel (pin 8 LOT)
- +11D for the line deflection (pin 12 LOT)
- +13VLOT for the frame deflection (pin 6 LOT)
- -15VLOT for the frame deflection (pin 3 LOT)
- Filament voltage (pin 9 LOT)

The EHT-INFO signal is derived via R3450//R3451. This signal decreases while the beam current increases. It is fed to the HOP to compensate for loss of picture width and picture height.

The DYN-FASE-CORR signal is fed to the HOP via C2455 and drives a dynamic phase correction necessary because of beam current variations. This is done by regulating T_{ON} of the line transistor TS7421.

East-West circuit
The moment TS7480 is driven into saturation, C2421 will discharge during the flyback. As a consequence of which C2421 must be charged again during the scan via the conduction diode D6422 (as long as C2421 is not charged to the voltage across L5422, D6422 will conduct). The current in the deflection coil is therefore larger than the current flowing in L5422 (1-2). The voltage across the deflection coil increases, so the picture width increases. When TS7480 blocks, C2421 will not discharge anymore and the voltage across C2421 will remain constant. The result is that the voltage across the deflection coil is minimal. The voltage across coil L5422, however, is maximal. This coil (L5422) consists of a transformer:
- As the current through the coil 1-2 increases (smaller picture width), the current through coil 3-4 decreases. Because of the transformer characteristic a higher voltage will be subjected to coil 3-4, which will counteract the current. The current will diminish even further.
- When the current through coil 1-2 diminishes (larger picture width), the current through coil 3-4 increases.

The EW Drive

The EW drive signal originates in the HOP and is supplied to TS7480. The shape of this signal determines the various geometric correction parameters:

- H amplitude
- EW-parabola
- EW-corner
- EW-trapezium
- Horizontal parallelogram
- Horizontal bow

Beam current correction

The EHT-info at point 10 of the LOT is dependent on the value of the beam current and the voltage divider R3450, R3451 and C2450. The EHT-info is fed to the HOP to trim the contrast and to compensate for the changes in picture-width as a function of the EHT-info, when the high-voltage is decreased. The EHT-info is integrated via C2450 and sent to the gate of the E/W FET (TS7480) as a DC-voltage to correct the EW-current.

9.1.11 Vertical (frame) deflection (diagram A4)

Driving the frame output stage

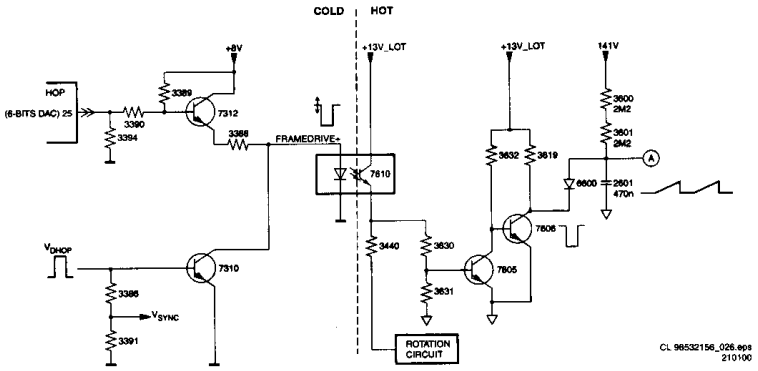

Figure 9-12

The HOP drives the frame output stage. As the HOP is 'cold' and the frame output stage is 'hot', they must be galvanic isolated by means of an optocoupler. In the MG-chassis the HOP generates 3 signals needed for the frame output stage: VDPOS, VDNEG and FRAME ROTATION. To avoid the costs of 3 optocouplers, the frame drive pulse and rotation DC-voltage are added together and then fed to optocoupler TS7610.

This is done as follows: The VD100 signal from the PICNIC (diagram B3 pin 19) is extended for 16.5 lines and inverted via a monostable multivibrator (TS7311 & TS7309, diagram B4). The output signal VDHOP is then superimposed on a DC-voltage from pin 25 of the HOP. The resulting signal is called FRAMEDRIVE+ and is fed to optocoupler 7610 (diagram A4). So this signal contains info for both the frame deflection and the frame rotation.

The circuit around IC7440 will amplify this signal and the output current will flow through the rotation coil. The vertical pulses on this signal are filtered by C2445 to ensure that only a DC-voltage will be supplied to the rotation coil.
The output voltage of the rotation circuit is between -8 and +8 V.

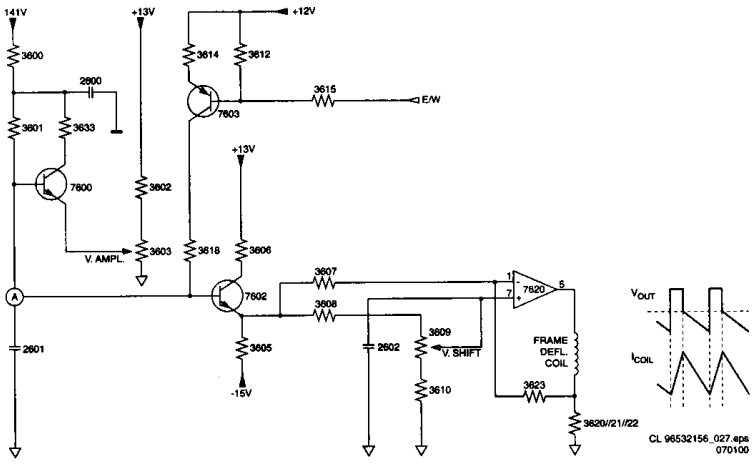

Figure 9-13

The sawtooth voltage for the frame output stage is not generated by the HOP but by a discrete circuit after the optocoupler 7610: via R3600 and R3601 a linear increasing voltage over C2601 is built up with a large time constant.

The circuit around TS7603 is a current source, driving C2601 with a current value derived from the E/W modulator. This will result in an S-shaped voltage on C2601 (also known as EW-correction).

Flyback generator

The frame output stage is supplied via the +13 V and -15 V coming from the LOT. The output of the amplifier is 0 V_{DC}, so a coupling capacitor is not required.

During the (forward) scan, a supply of +13 and -15 V is sufficient to respond to the slow changing current. The flyback generator puts a voltage of -15 V on pin 3. Because of the voltage drop over zenerdiode D6622 (8.2 V), C2622 will be charged to 19 V: being 13 + (15 - 8.2 - 0.7) V.
During the flyback scan, the change in current per time is much larger, so a higher voltage is required. The flyback generator will now generate a voltage of +13 V on pin 3. Added to the charge on C2622 this will give a flyback voltage of 32 V (depending on the CRT size, this value can differ).

The IC amplifier (IC7620, pin 5) supplies the sawtooth current to the frame deflection coil. The current through this coil is measured via R3620//R3621//R3622 and fed back to the inverting input of the amplifier.
R3624 and C2624 on the output of the amplifier, form a filter for high frequencies and in that way also prevents oscillations. Peak voltages on the output, e.g. as a result of a possible flash, are damped by the clamp circuit consisting of D6619, C2627 and R3627. The network consisting of R3625, R3629 and C2629 form an extra damping circuit.

Protection circuit for bridge-coil and frame output stage

The secondary voltage of bridge coil L5422 is guarded at the diode modulator (D6421/22) via a detection circuit consisting of an 8.2 V zenerdiode (diagram A3). When the bridge-coil is working properly, the average voltage on D6422 is such that this zenerdiode will conduct and will drive TS7652 into saturation via the BRIDGE_PROT signal (see diagram A4). When, for any reason, the secondary side of the bridge-coil is shorted, the average voltage on D6422 will drop below the zener-voltage and TS7652 will block. Now capacitor C2642 will be charged. Transistor TS7407 will start conducting and the STANDBY signal will be grounded via R3403. This will switch off the main supply (see diagram A1).

Via the circuit built around TS7641 the frame output stage is guarded. If the frame output stage is working properly, TS7641 and TS7652 will both conduct and thereby discharging C2642. TS7407 is blocked now, causing the STANDBY signal to be high-ohmic.
If there are frame pulses missing, TS7641 will block and capacitor C2642 can be charged. Transistor TS7407 will now start conducting and the STANDBY signal will be grounded via R3403. This will switch off the main supply (see diagram A1).

9.1.12 Audio (diagram B6, A5 & A6)

Introduction
All EM2E sets contain one of ITT's Multistandard Sound Processing IC's for sound decoding. The diversity arises because each member of the MSP-family handles its own set of sound standards:

- MSP3415D: Europe & AP decoding, Stereo incl. NICAM.
- MSP3451G: Global decoding, Virtual Dolby.

This IC takes care of the main FM sound decoding. AM decoding for the L system is done by the HIP. The demodulated L sound is then again source selected and processed in the MSP. The reason for this is the bad AM detection performance of the MSP. In case of NICAM L however, this is handled by the MSP.

All MSP versions contain digital audio processing, used for the basic left/right stereo sound, such as bass, treble, balance, incredible sound and spatial. In addition to that, the MSP3451 is also able to perform Virtual Dolby, a Dolby approved sound mode for surround sound reproduction with left/right speakers only.

Audio source selection

- MSP3515D (stereo)

This IC is an economised version of the MSP3410 that is used in the MG-chassis. It can cover 2 stereo and 1 mono (AM) input. Since more inputs are required, a separate source selector is used (HEF4052, IC7675). This selector has EXT1, EXT2, FRONT and SC1-OUT (Tuner) as input and is connected to the SCART1 input of the MSP3415. The SCART2 input is not used.

Since the MSP3415 has only one SCART output, which is connected to the SCART1, a constant level output and connection to SCART2 is not available. This is fixed by connecting the HEF4052 input selector to the constant level output and to SCART2 via a so-called 'Régimbeau' switch (IC7652).
This switch is needed to prevent feedback (Larsen effect). When EXT2 is chosen as input signal, and the output of SCART2 is selected, this means that the main picture is also EXT2 and will cause the Larsen effect. To prevent this, the record select must be switched to Tuner. This is especially important when decoders are used, behind a 'transparent' VCR connected to EXT2.

To get a constant level output if the Tuner is selected, the SCART1 output (Tuner at any time), has to be fed back to the input selector and selected as input for the MSP (SCART1 input).

The MSP3415 has no separate output to drive a headphone. The headphone is therefore hardwired (on the LSP) to the main sound output.

- MSP3451G (Virtual Dolby)

The MSP3451, which is used in all versions supporting Virtual Dolby, is capable of supporting 4 stereo inputs and 1 mono (AM) INPUT. Therefore the extra input selector (HEF4052) is not needed.

The MSP3451 is also capable of supporting 2 SCART outputs, so the trick used in the MSP3415 set-up to get a constant level output is not needed.

The MSP3451 has a separate headphone output, so sound control be done separate from the speakers.

Audio decoding
At the input a choice can be made between two IF-signals; SIF and SIFM.
The selected signal is fed to the AGC. After this, an ADC converts the IF-signal to digital.

This digital signal can be processed by 2 demodulation channels. The first one is able to handle FM and NICAM signals. The second one can handle FM and AM signals.

Each channel contains a mixer to shift the incoming signal in the frequency domain. This shift is determined by the value of a DCO.

After the down-mix, the signal is fed, via a filter, to a discriminator. From here the AM, FM or NICAM demodulation can be performed.

Both channels contain an 'automatic carrier mute' function, which automatically mutes the output of the analogue section when no carrier is detected.

After demodulation, the FM-signals are subjected to a de-emphasis operation. After that the matrix of the stereo system is applied.

Audio processing
The sound processing in EM2E is completely done by the MSP3415D for 'Stereo' sets or the MSP3451G for 'Virtual Dolby' sets:

- Volume control is done by the user via the SOUND menu.
- Tone control in 'Stereo' sets is done via the BASS/TREBLE control, in 'Virtual Dolby' sets via the 5-band equaliser.
- Headphone control in 'Stereo'-sets is done via the loudspeaker output of the MSP, no sound control possible. In 'Virtual Dolby'-sets, the MSP has a separate Headphone output so separate sound control is possible.
- Mute control can be done in different ways:
  - Via the SOUND_ENABLE line of the OTC. Used during start-up/switch-off conditions, in order to avoid audible plops.
  - Via the decoding part of the MSP.
  - Via the processing part of the MSP.

The mute on the RC or in the UI is per today a combination of processing mute and SOUND_ENABLE line. When a user mute is done, the processing mute will turn down the volume, after which the SOUND_ENABLE line is switched. De-muting is the other way around. The reasons for this is a technical problem with crosstalk of the headphone into the loudspeakers.

Automatic Volume Levelling (AVL)
One of the features of the MSP-family is AVL. If used, it limits the big volume differences in the broadcast between e.g. news transmissions and commercials or within a movie.
To be able to get a Dolby approval (for the Virtual Dolby sets), the AVL feature must be switchable. Therefore, the AVL feature is customer switchable via the menu.

Audio amplification
The audio amplifier part is very straight forward. It uses an integrated power amplifier IC, the TDA2616. It delivers an

output of 2 x 10 WRMS to 2 full range speakers. A subwoofer is not implemented.

The supply voltage is +28 V, generated by the main supply via L5506.

Muting is done via the SOUND-ENABLE line connected to pin 2 of the amplifier-IC and coming from the OTC. This signal is inverted by TS7730, as a result of which at a high level of the SOUND-ENABLE signal, current is sinked from pin 2 and the IC mutes.

9.1.13 Teletext / NexTView (diagram B5)

Teletext
The TXT-decoder in the OTC gets its video signal directly on pin 5 (from the HIP).
The RGB-outputs are available on pins 77/78/79. Fast blanking is realised via pen 80.
In the previous chassis there was separate memory to store the TXT information. In EM2E the DRAM (IC7007) of the microprocessor is also used for the TXT-decoder.

NexTView
NexTView allows the user to display a program guide on the TV screen that contains extensive information for each program.

This information can be displayed in a number of different summaries:
- DAY: The daily summary shows, from the current moment, the program schedule for several stations for a short time ahead.
- CHANNEL: The channel summary shows the program schedule for one station.
- THEME: The theme summary shows, for each theme, the program schedule of the various stations. These themes consist of sport, film, culture, etc. and is determined from the station side.

NexTView does not have to restrict itself to information about the station that is being viewed, but also offers information about other stations. In the various summaries 3 different commands can be given for the various program overviews. These commands appear as follows:
- WATCH: The set immediately switches over to the station concerned.
- REMINDER: The start time and date and the station of the program concerned is stored in the TV reminder list. The TV will give an OSD-message with the program information, or switch on the set at the correct moment (provided the set is in Standby) and tune to the station concerned.
- RECORD: The timer of the video recorder with 'Easylink Plus' is programmed with the data of the program concerned. There has to be a video recorder (with Easylink Plus) connected to SCART2 otherwise the 'RECORD' function will not be highlighted. The connection is via pin 10 from SCART. This means that it has to be a full SCART or at least pin 10 has to be wired.

In order to be able to realise NexTView, two teletext type data flows, Data stream 1 and 2, are transmitted with various sub-code pages of information. This data flow can transport limited information (max. 40 pages). Data stream 1 is quick repeating with a repetition time of approximately 20 to 30 seconds. However, Data stream 2 has a much longer repetition time of approximately half an hour and has a large transport capacity.
- Data stream 1 contains information of the station that is being viewed.
- Data stream 2 contains up to one week of advance information from various stations that are covered by the provider.

9.1.14 CRT / SCAVEM / Rotation (diagram F)

RGB amplifiers
On the CRT panel, the RGB amplifier (TDA6108, IC7307) is located. Via the outputs 9, 8 and 7 the cathodes of the picture tube are driven.
The supply voltage for the amplifier is 180 V and is derived from the LOT.

SCAVEM
The SCAVEM-circuitry is implemented in the layout of the picture tube panel. It is thus not an extra module. SCAVEM means SCAn VElocity Modulation. This means that the horizontal deflection is influenced by the picture content. In an ideal square wave, the sides are limited in slope by a limited bandwidth (5 MHz).
SCAVEM will improve the slope as follows: At a positive slope, a SCAVEM-current is generated which supports the deflection current. The first half of the slope the spot is accelerated and the picture is darker, while at the second half of the slope, the spot is delayed and the slope becomes steeper.
At the end of the slope, the SCAVEM-current decays to zero and the spot is at the original position. An overshoot occurs which improves the impression of sharpness. At the negative slope, the SCAVEM-current counteracts the deflection.
During the first half of the slope, the spot is delayed, the slope becomes steeper.
During the second half the spot accelerates, the SCAVEM-current is zero at the end of the slope.

Via the three resistors R33315, R33317 and R3320, Red, Green and Blue are added together and offered to the emitter TS7300. On the collector of this transistor, configured in a common base, the sum of these 3 signals is obtained. Via the emitter follower formed with TS7301, this signal is conveyed to the differentiator C2303, R3309 and R3318. Only the high frequencies are differentiated (small RC-time).
The positive and negative pulses of this signal drive respectively TS7303 and TS7302 into conductivity. The DC setting of the output stage is set by R3304, R3308, R3316 and R3319. The working voltage of the transistors is settled at half the supply voltage.
At the positive section of the pulse, the current flows through R3318, C2307, the SCAVEM-coil and TS7303. At the negative section of the pulse, the current flows through R3318, C2409, the SCAVEM-coil and TS7302.

Rotation
In sets with a rotation coil (widescreen sets ≥ 32"), the amount of frame rotation is adjusted with the DAC-output of the HOP (see also 'Vertical Deflection').

9.1.15 Software related features

Following features are described:
- Smart Local Doming Prevention (SLDP)
- Auto TV
- Switch ON behaviour

Smart Local Doming Prevention (SLDP)
A CRT with an iron shadow mask shows a considerable amount of local doming (due to local heating), resulting in unwanted colour artefacts.
SLDP helps to reduce these artefacts for both 16:9 and 4:3 sets to an acceptable level. It measures the beam current in areas that are sensitive to local doming and reduces the contrast if the beam current in these places exceeds a pre-set threshold.
The chosen solution in EM2E, is based on the PICNIC hardware and software and it uses the histogram measurement of the PICNIC to make a prediction of the local heating of the CRT shadow mask.

With SLDP, local doming is diminished to an acceptable level at the cost of contrast reduction. By using a 'smart' solution for a part of the necessary contrast reduction, the resulting picture remains even more acceptable.
SLDP is not a feature. It's an algorithm that diminishes local doming effects. These effects occur whenever iron mask (and in a limited way invar mask) tubes are applied. Therefore, there is no reason to make it switchable for the customer. However, SLDP can be switched off via the Service Alignment Mode (SAM).

AutoTV
The AutoTV (or 'Automatic Picture Control' or 'Active Control') aims at giving the customer the best possible picture performance at any time. Therefor it does real time processing of the video signal and as a result, it decides to adapt several video parameters throughout the whole chassis.

The AutoTV feature integrates traditional picture performance, AutoTV functionality and 'smart controls' in order to come to a kind of 'supersmart' TV. It can be subdivided in:

- Auto Noise Reduction. This algorithm measures the amount of noise in the incoming video signal (this is done by the LIMERIC part of the PICNIC). As a result of this measurement, the amount of noise in the picture is corrected, starting from that noise level which is annoying for the customer. Which parameters exactly can be used is depending on the hardware.
- Auto Sharpness. This algorithm measures the amount of sharpness via the bandwidth of the incoming video signal and adapts the peaking frequency in the PICNIC according to this info. If the 'sharpness meter' sees the video content as 'sharp', high frequency peaking will be used. On the other hand, if the picture content is seen as 'not sharp', a low/mid frequency peaking is used. There is a coupling between the Auto Noise and the Auto Sharpness algorithm: if noise is present in the video content, then in general the sharpness will be made less aggressive. Special care has to be taken to the interaction of the LIMERIC and the vertical peaking of the PICNIC: a too big amount of vertical peaking increases the visibility of the 2DNR artefacts.

In the EM2E a limited AutoTV control function is used: only a combination of above described features is used in the background in order to improve the set performance, specially focussed on noise reduction.

Switch ON behaviour
First of all, the microprocessor needs to start up: After the power is applied, the 'Standby supply' starts oscillating, generating the +5V2 and +3V3. When ready, a reset (POR) is generated and the OTC is awakened.

During reset, the OTC puts a high level on all his outputs, causing the degaussing relay to close. After the reset, the outputs and inputs of the OTC must be initialised to their default state. The degaussing output of the OTC must stay high for 12 seconds.

Next step is the check whether the set needs to be in Standby or not. Therefore, the NVM content is read and the Standby-bit is checked. If the set is to stay in Standby, there is no further action.

If the set has to be switched 'on', the Standby-info line is pulled low. This results in the low power mode start-up of the HOP. The line drive starts to run on 50 kHz, wakes up the main supply and the +5 V, +8 V and +141 V supplies become available. The OTC waits until the +8 V is fully present. This is done by checking the ADC input of the OTC. A positive result means three times a positive +8 V detection in a row (time between each polling approx. 5 ms). If this detection still fails after 1 second, an error should be generated and the set must be switched to protection (error: "+8 V).

After detection of the +8 V, the MSP must be reset, since it can disturb I^2C traffic when not properly reset. From this moment on, I^2C traffic is possible.

To be sure that the HOP is properly started up, the POR bit of the HOP should be read. If this is not successful, the Standby info has to be put high again and an error code (code 11: HOP) will be generated. If the reading of the POR bit is successful, the starting procedure can be continued.

The Standby info line must be switched high again. The sync mode and the black current stabilisation loop of the HOP must be disabled in order to have a smooth start-up. Within 23.5 ms after reading the HOP POR bit, the HOP has to be started up via the HOP_start commando. If this condition is not fulfilled, the HOP will stop his line drive again and the set will not be able to start up.

During start-up of the deflection, I^2C traffic must be disabled for 250 ms to avoid data corruption. If flashes or spikes are generated during EHT start-up, I^2C data could be disturbed or corrupted.

After deflection is powered up completely, all protection algorithms are set active.
The rest of the NVM content can now be read and the IC's can be initialised according this info.

If SLDP is present in the set, an initialisation of SLDP has to be performed, including a calibration of the beamcurrent ADC.

The sync-mode of the HOP must be switched to active and the black current stabilisation loop in the HOP is switched on. Some extra checking is done to ensure that the loops are completely stabilised. Software sets all the necessary parameters for a correct sound and image and unblanks the picture.

A provision is foreseen to avoid sets in the field that will never unblank, if the picture tube is severely worn out. If the black current stabilisation does not become stable within a time frame of 30 seconds, the picture is unblanked anyway

9.2 Abbreviation list

AARA	Automatic Aspect Ratio Adaptation: algorithm that adapts aspect ratio to remove horizontal black bars; keeping up the original aspect ratio
ACI	Automatic Channel Installation: algorithm that installs TV sets directly from cable network by means of a predefined TXT page
ADC	Analogue Digital Converter
AFC	Automatic Frequency Control: control signal used to tune to the correct frequency
AGC	Automatic Gain Control: algorithm that controls the video input of the featurebox
AI	Artificial Intelligence
AM	Amplitude Modulation
ANR	Automatic Noise Reduction: one of the algorithms of Auto TV
AR	Aspect Ratio: 4 by 3 or 16 by 9
Artistic	see OTC 2.5: main processor
ASF	Auto Screen Fit: algorithm that adapts aspect ratio to remove horizontal black bars but without throwing away video information
ATV	See Auto TV
AUDIO_C	Audio Centre
AUDIO_L	Audio Left
AUDIO_R	Audio Right
AUDIO_SL	Audio Surround Left
AUDIO_SW	Audio Subwoofer
AUDIO-L-PROC	Audio left processed
AUDIO-R-PROC	Audio right processed
AUDIO-SR	Audio surround right
Auto TV	Name for the combination of picture features/improvements which work automatically (ANR / Auto sharpness/ Auto Histo/ambient light).
BC-PROT	Beam current protection
BG	System B and G
BLC-INFO	Black current information
B-SC1-IN	Blue SCART1 in
B-SC2-IN	Blue SCART2 in
B-TXT	Blue teletext
CENTER	Centre speaker
C-FRONT	Chrominance front input
CL	Constant Level: audio output to connect with an external amplifier
ComPair	Computer aided rePair
CRT	Cathode Ray Tube or picture tube
CSM	Customer Service Mode
CTI	Colour Transient Improvement: manipulates steepness of chroma transients
CVBS	Composite Video Blanking and Synchronisation
CVBS-SC1-IN	CVBS SCART1 in
CVBS-SC2 OUT	CVBS SCART2 out
CVBS-SC2-IN	CVBS SCART2 in
CVBS-SC3-IN	CVBS SCART3 in
CVBS-SC4-IN	CVBS SCART4 IN
CVBS-TER	CVBS terrestrial
CVBS-TXT-DS-OUT	CBVBS teletext Dual Screen out
CVBS-TXT-OUT	CVBS teletext out
CVBS-Y-FRONT	CVBS luminance front input
DAC-HOP	Digital analogue converter HOP IC
DBE	Dynamic Bass Enhancement: extra low frequency amplification
DC-filament	Filament supply voltage
DC-PROT	DC protection
DFU	Direction For Use: description for the end user
DNR	Digital Noise Reduction: noise reduction feature of the box
DSP	Digital Signal Processing
DST	Dealer Service Tool: special remote control designed for dealers to enter e.g. service mode
DVD	Digital Versatile Disc
DYN-FASE-COR	Dynamic phase correction
EHT	Extra High Tension
EHT-INFO	Extra High Tension information
ELDP	Electrical Local Doming Prevention (only HW)
EPG	Electronic Program Guide: system used by broadcasters to transmit TV guide information (= NexTView)
EW	East West, related to horizontal deflection of the set
EXT	External (source), entering the set via SCART or via cinches
FBL	Fast Blanking: DC signal accompanying RGB signals
FBL-SC1-IN	Fast blanking signal for SCART1 in
FBL-SC2-IN	Fast blanking signal for SCART2 in
FBL-TXT	Fast Blanking Teletext
FBX	Feature Box: part of small signal / separate module which contains 100 Hz processing, extra featuring and AutoTV algorithms
FEAT-U	U from Feature Box
FEAT-V	V from Feature Box
FEAT-Y	Y from Feature Box
FILAMENT	Filament of CRT
FLASH	Flash memory
FM	Field Memory or Frequency Modulation
FMS	Functional Module Specification: document that describes an isolated hardware function
FRONT-C	Front input chrominance (SVHS)
FRONT-DETECT	Front input detection
FRONT-Y_CVBS	Front input luminance or CVBS (SVHS)
FRS	Functional Requirement Specification: software specification document
G-SC1-IN	Green SCART1 in
G-SC2-IN	Green SCART2 in
G-TXT	Green teletext
HA	Horizontal Acquisition: horizontal sync pulse coming out of the HIP
HD100	Horizontal Drive: horizontal sync pulse coming out of the featurebox
HDTV	High Definition TV: highest resolution defined by the ATSC standard (1080 lines and 1920 horizontal pixels, referred to as 1080i) The second HDTV standard, 720p x 1280 is not used in EM2E chassis (3fH standard not feasible)
Headroom	Extra margin provision to avoid clipping of signals
HEATER	Heater (Filament)
HFB	Horizontal Flyback Pulse: horizontal sync pulse from large signal deflection
HFB+13V	Non rectified output 13V-winding LOT
HIP	High-end video Input Processor: video and chroma decoder of EM2E
HOP	High-end video Output Processor: video, sync and geometry controller of EM2E
HP	Headphone
HSI	Hardware Software Interface

IN-FRONT-SNDL	Sound left front in
IN-FRONT-SNDR	Sound right front in
IN-SC1-B	In SCART1 Blue
IN-SC1-G	In SCART1 Green
IN-SC1-R	In SCART1 Red
IN-SC1-SNDL	In SCART1 sound left
IN-SC1-SNDR	In SCART1 sound right
IN-SC2-B	In SCART2 Blue
IN-SC2-CVBS_Y	In SCART2 CVBS or luminance (SVHS)
IN-SC2-FBL	In SCART2 fast blanking
IN-SC2-G	In SCART2 Green
Interlaced	Scan mode where two fields are used to form one frame. Each field contains half the number of the total amount of lines. The fields are written in "pairs", causing line flicker.
IO-BUS	In/Out - Bus
Last Status	The settings last chosen by the customer and read and stored in RAM or in the NVM. They are called at start-up of the set to configure it according the customers wishes
LDP	Line Deflection Protection
LED	Light Emitting Diode
LINE-DRIVE	Line drive signal
LNA	Low Noise Adapter
LSP	Large signal panel
MSP	Multistandard Sound Processor: ITT sound decoder of EM2E
MUTE	Mute-Line
NC	Not Connected
NDF	No vertical DeFlection: vertical flyback protection
NHF	No Horizontal deflection: horizontal flyback protection
NVM	Non Volatile Memory: IC containing TV related data e.g. alignments
O/C	Open Circuit
ON/OFF LED	On/Off control signal for the LED
OSD	On Screen Display
OTC	On screen display Teletext and Control; also named Artistic (SAA5800)
P50	Project 50 communication: protocol between TV and peripherals
PCB	Printed Circuit board
PICNIC	Peripheral Integrated Combined Network IC: main IC for 100 Hz featuring and feature processing
PILOT	Pilot Signal
PILOTMUTE	Pilot Mute signal
Progressive Scan	Scan mode where all scan lines are displayed in one frame at the same time, creating a double vertical resolution.
PTP	Picture Tube Panel
RAM	Random Access Memory
RC	Remote Control
RC5	RC5 signal from the remote control receiver
RESET	Reset signal
ROM	Read Only Memory
SAM	Service Alignment Mode
SC	Sandcastle: pulse derived from sync signals
SCAVEM	Scan Velocity Modulation
S/C	Short Circuit
SC1-OUT	SCART output of the MSP audio IC
SC2-B-IN	Scart2 Blue in
SC2-C-IN	Scart2 chrominance in
SC2-OUT	SCART output of the MSP audio IC
SIF	Sound Intermediate Frequency
SIMM	80-fold connector between LSP and SSB
SLDP	Smart Local Dooming Prevention (HW and SW)
SNDL-SC1-IN	Sound left SCART1 in
SNDL-SC1-OUT	Sound left SCART1 out
SNDL-SC2-IN	Sound left SCART2 in
SNDL-SC2-OUT	Sound left SCART2 out
SNDR-SC1-IN	Sound right SCART1 in
SNDR-SC1-OUT	Sound right SCART1 out
SNDR-SC2-IN	Sound right SCART2 out
SNDR-SC2-OUT	Sound right SCART2 out
SNDS-VL-OUT	Surround sound left variable level out
SNDS-VR-OUT	Surround sound right variable level out
SNERT	Synchronous No parity Eight bit Reception and Transmit
SSB	Small Signal Board
STBY	Standby
SW	Subwoofer
TXT	Teletext
TXT DS	Teletext Dual Screen
µP	microprocessor
VA	Vertical Acquisition
V_{BAT}	main supply for deflection (mostly 141 V)
VD100	Vertical Drive: vertical sync pulse from deflection
VFB	Vertical Flyback Pulse: vertical sync pulse coming from the feature box
VL	Variable Level out: processed audio output towards external amplifier
WYSIWYR	What You See Is What You Record: record selection that follows main picture and sound
XTAL	Quartz crystal
Y-OUT	Luminance-signal to HOP IC

10. Spare parts list

Large Signal Panel [A]

Various

0010	2422 025 16374	2P Male
0020	4822 267 10774	2P Male
0032	4822 492 70788	IC-SPRING
0037	3104 304 21112	LOT SSB SUPPORT
0045	4822 267 10734	5P MALE
0065	3104 304 22031	LOT SPACER
0066	3104 304 21591	SCART SUPPORT BRACKET
0150	4822 265 11253	FUSE HOLDER
0153	4822 265 11253	FUSE HOLDER
0317	4822 265 20723	2P MALE
0324	3104 311 01881	CABLE 7P 480mm
0325	2422 025 16382	3P Male
0735	2422 025 16407	3P Male
0736	2422 025 16382	3P Male
0936	2422 025 12485	11P Male
0940	4822 267 10968	11P FEMALE
0943	4822 267 10748	3P MALE
0945	4822 267 10735	3P MALE
0946	5322 268 90415	2P MALE
0947	4822 267 10734	5P MALE
1001	4822 252 60151	SURGE PROTECT
1002	2422 132 07411	RELAY 1P 5V 5A
1003	4822 267 10973	1P
1200	4822 210 10848	UV1316/A I U-2
1205	2422 025 16599	80P Female SIMM
1501	4822 070 34002	FUSE 4A
1503	2422 086 10912	FUSE 2,5A
1901	4822 267 10771	IC SOCKET 42P
1902	4822 267 10982	2P
8000	4822 320 12525	CABLE
8001	4822 320 20234	EHT CABLE
8015	4822 320 20216	CABLE
	3122 785 100	Supply Kit Mains Supply EM2E
	3122 785 100	Supply Kit Standby Supply EM2E
	3122 785 100	Line Repair Kit EM2E

⊣⊢

2101	5322 122 32818	2.2nF 10% 100V
2102	4822 124 40248	10µF 20% 63V
2103	5322 122 32531	100pF 5% 50V
2104	4822 123 14025	2200µF 20% 16V
2105	5322 122 32531	100pF 5% 50V
2106	5322 126 10223	4.7nF 10% 63V
2107	5322 122 32818	2.2nF 10% 100V
2108	4822 121 70162	10nF 5% 400V
2109	4822 126 13482	470nF 80/20% 16V
2110	5322 121 42498	680nF 5% 63V
2111	4822 121 43526	47nF 5% 250V
2113	4822 122 33127	2.2nF 10% 63V
2114	4822 126 10206	2.2nF 10% 500V
2200	4822 124 40196	220µF 20% 16V
2201	4822 126 14076	220nF 25V
2202	4822 126 13473	220nF 80-20% 50V
2203	4822 124 41584	100µF 20% 10V
2400	4822 124 11575	47µF 20% 160V
2412	4822 126 13751	47nF 10% 63V
2413	4822 124 12255	10µF 20% 50V
2414	4822 126 13751	47nF 10% 63V
2415	4822 122 33575	220pF 5% 63V
2417	4822 126 14076	220nF 25V
2419	4822 126 14237	470pF 10% 2KV
2420	4822 121 70594	1nF 5% 2KV
2421	2022 333 00086	470nF 5% 250V
2421	4822 121 42634	560nF 5% 250V
2425	4822 121 10526	9N1 5% 2KV
2425	4822 121 70435	10nF 5% 2KV
2426	4822 121 10653	22nF 5% 630V
2426	4822 121 10658	24nF 5% 630V
2429	4822 121 43343	4.7nF 10% 400V
2430	4822 121 41857	10nF 5% 250V
2431	4822 121 42077	6.8nF 10% 400V
2431	4822 126 13599	3.3nF 10% 500V
2433	2022 333 00086	470nF 5% 250V
2433	4822 121 42634	560nF 5% 250V
2435	4822 121 10526	9N1 5% 2KV
2450	5322 121 42578	100nF 5% 250V
2455	5322 126 10511	1nF 5% 50V
2460	4822 124 40784	3300µF 20% 16V
2461	4822 122 31177	470pF 10% 500V
2462	4822 124 80061	1000µF 20% 25V
2463	4822 122 31177	470pF 10% 500V
2464	4822 124 80061	1000µF 20% 25V
2465	4822 122 31177	470pF 10% 500V
2468	4822 124 12297	4.7µF 20% 350V
2469	4822 122 31177	470pF 10% 500V
2480	4822 121 51442	2.2nF 10% 50V
2489	4822 124 40433	47µF 20% 25V
2490	4822 122 33891	3.3nF 10% 63V
2491	4822 124 40768	0.47µF 20% 100V
2492	4822 126 14076	220nF 25V
2495	4822 126 13838	100nF 20% 50V
2499	4822 126 13838	100nF 20% 50V
2501	4822 126 11524	1.5nF 10% 1KV
2502	5322 122 32818	2.2nF 10% 100V
2503	5322 121 42489	33nF 5% 250V
2505	4822 126 14504	3.3nF 20% 250V
2507	4822 126 13589	470nF 275V
2508	4822 126 14153	2.2nF 10%B 1KV
2509	4822 126 14153	2.2nF 10%B 1KV
2510	4822 124 12415	220µF 20% 400V
2512	4822 124 12056	1000µF 20% 35V
2513	5322 122 34099	470pF 10% 63V
2514	5322 122 31863	63V 330pF 5%
2515	4822 124 11575	47µF 20% 160V
2518	4822 126 11308	47pF 5% 500V
2519	5322 122 32818	2.2nF 10% 100V
2520	4822 126 14585	100nF 10% 50V
2521	4822 122 33216	270pF 5% 50V
2528	4822 126 14585	100nF 10% 50V
2530	4822 126 14585	100nF 10% 50V
2531	4822 122 31169	1.5nF 10% 500V
2535	4822 121 43913	470nF 10% 100V
2536	4822 126 10206	2.2nF 10% 500V
2537	4822 124 11913	22nF 20% 275V
2538	5322 126 10223	4.7nF 10% 63V
2600	4822 121 43913	470nF 10% 100V
2601	4822 121 51252	470nF 5% 63V
2602	4822 124 40433	47µF 20% 25V
2603	4822 122 33177	10nF 20% 50V
2604	4822 124 40248	10µF 20% 63V
2610	4822 122 33127	2.2nF 10% 63V
2620	4822 126 14076	220nF 25V
2621	4822 126 13838	100nF 20% 50V
2622	4822 124 40255	100µF 20% 63V
2624	4822 121 51252	470nF 5% 63V
2625	4822 121 51252	470nF 5% 63V
2627	5322 124 40641	10µF 20% 100V
2642	4822 124 40255	100µF 20% 63V
2700	4822 124 21913	1µF 20% 63V
2701	4822 124 21913	1µF 20% 63V
2730	4822 124 81151	22µF 50V
2731	4822 124 81151	22µF 50V
2732	4822 124 40255	100µF 20% 63V
2733	4822 124 40255	100µF 20% 63V
2734	4822 124 81151	22µF 50V
2735	4822 124 81151	22µF 50V
2736	5322 122 31865	1.5nF 10% 63V
2737	5322 122 31865	1.5nF 10% 63V
2756	4822 126 13751	47nF 10% 63V
2760	4822 124 80061	1000µF 20% 25V
2761	4822 124 80061	1000µF 20% 25V
2765	4822 124 40255	100µF 20% 63V
2767	4822 124 40255	100µF 20% 63V
2782	4822 126 13751	47nF 10% 63V
2902	5322 122 31863	330pF 5% 63V
2903	5322 122 31863	330pF 5% 63V
2906	5322 122 32531	100pF 5% 50V
2909	5322 122 31863	330pF 5% 63V
2910	5322 122 32531	100pF 5% 50V
2912	4822 124 40248	10µF 20% 63V
2913	4822 126 14585	100nF 10% 50V
2915	5322 122 31863	330pF 5% 63V
2916	5322 122 31863	330pF 5% 63V
2917	5322 122 32531	100pF 5% 50V
2919	5322 122 31863	330pF 5% 63V
2920	5322 122 32531	100pF 5% 50V
2923	5322 122 31863	330pF 5% 63V
2925	5322 122 31863	330pF 5% 63V
2926	4822 124 81044	470µF 20% 6.3V
2927	4822 124 40433	47µF 20% 25V
2941	5322 122 31865	1.5nF 10% 63V
2942	5322 122 31865	1.5nF 10% 63V
2951	4822 124 21913	1µF 20% 63V
2952	4822 126 13751	47nF 10% 63V
2953	4822 126 13751	47nF 10% 63V

⊣▭⊢

3101	4822 053 20106	10M 5% 0.25W
3102	4822 050 26801	680Ω 1% 0.6W
3103	4822 050 26801	680Ω 1% 0.6W
3104	4822 116 52195	47Ω 5% 0.5W
3105	4822 050 26801	680Ω 1% 0.6W
3106	4822 116 52256	2k2 5% 0.5W
3107	4822 116 52256	2k2 5% 0.5W
3108	4822 116 52182	15Ω 5% 0.5W
3110	4822 052 10109	10Ω 5% 0.33W
3113	4822 116 52182	15Ω 5% 0.5W
3114	4822 116 83872	220Ω 5% 0.5W
3117	4822 116 52195	47Ω 5% 0.5W
3118	4822 050 24708	4Ω7 1% 0.6W
3120	4822 051 20109	10Ω 5% 0.1W
3123	4822 116 52176	10Ω 5% 0.5W
3124	4822 116 52199	68Ω 5% 0.5W
3125	4822 116 52182	15Ω 5% 0.5W
3126	4822 050 21003	10k 1% 0.6W
3127	4822 116 52289	5k6 5% 0.5W
3200	4822 051 20101	100Ω 5% 0.1W
3201	4822 051 20101	100Ω 5% 0.1W
3250	4822 051 20223	22k 5% 0.1W
3402	4822 117 10837	100k 1% 0.1W
3403	4822 051 20101	100Ω 5% 0.1W
3404	4822 051 20471	470Ω 5% 0.1W
3406	4822 051 20101	100Ω 5% 0.1W
3407	4822 117 10833	10k 1% 0.1W
3410	4822 051 20479	47Ω 5% 0.1W
3411	4822 116 52193	39Ω 5% 0.5W
3414	4822 117 13577	330Ω 1% 1.25W
3415	3198 012 31590	15Ω 5% 3W
3415	4822 117 12836	12Ω 5% 3W
3417	4822 116 52176	10Ω 5% 0.5W
3418	4822 050 22704	270k 1% 0.6W
3431	4822 052 10101	100Ω 5% 0.33W
3431	4822 052 10221	220Ω 5% 0.33W
3450	4822 116 52303	8k2 5% 0.5W
3450	4822 116 83961	6k8 5%
3451	4822 116 52257	22k 5% 0.5W
3460	4822 052 10108	1Ω 5% 0.33W
3461	4822 052 10108	1Ω 5% 0.33W
3462	4822 052 10108	1Ω 5% 0.33W
3463	4822 052 10108	1Ω 5% 0.33W
3464	4822 052 10108	1Ω 5% 0.33W
3465	4822 052 10108	1Ω 5% 0.33W
3466	4822 052 10688	6Ω8 5% 0.33W
3466	4822 052 10828	8Ω2 5% 0.33W
3467	4822 052 10108	1Ω 5% 0.33W
3468	4822 052 11688	6Ω8 5% 0.5W
3475	4822 116 52175	100Ω 5% 0.5W
3481	4822 116 52175	100Ω 5% 0.5W
3483	4822 051 10102	1k 2% 0.25W
3484	4822 117 11139	1k5 1% 0.1W
3485	4822 117 11454	820Ω 1% 0.1W
3486	4822 117 12955	2k7 1% 0.1W
3487	4822 117 11449	2k2 1% 0.1W
3488	4822 116 52272	330k 5% 0.5W
3488	4822 116 83874	220k 5% 0.5W
3489	4822 117 11449	2k2 1% 0.1W
3491	4822 050 21504	150k 1% 0.6W
3495	4822 051 20683	68k 5% 0.1W
3496	4822 117 11507	6k8 1% 0.1W
3497	4822 117 10834	47k 1% 0.1W
3498	4822 051 20472	4k7 5% 0.1W
3499	4822 117 10837	100k 1% 0.1W
3500	4822 117 12074	1Ω5 10% 7W
3501	3198 013 04710	470Ω 2% 1/2W
3504	4822 116 83883	470Ω 5% 0.5W
3507	4822 050 21604	160k 1% 0.6W
3508	3198 012 16820	6.8k 1W
3509	2322 595 90021	VDR DC 1M A/495V
3510	4822 117 11951	2k 1% 0.1W
3511	4822 116 52276	3k9 5% 0.5W
3512	4822 116 52297	68k 5% 0.5W
3513	4822 116 52272	330k 5% 0.5W
3514	4822 053 10108	1Ω 5% 1W
3515	4822 053 10108	1Ω 5% 1W
3516	4822 116 10075	9Ω 220V
3518	4822 050 11204	120k 1% 0.4W
3519	4822 051 20223	22k 5% 0.1W
3520	4822 053 11333	33k 5% 2W

3521	4822 117 10118	1M 5% 0.5W
3522	4822 116 83961	6k8 5%
3523	4822 051 20105	1M 5% 0.1W
3524	4822 051 10102	1k 2% 0.25W
3525	4822 051 20479	47Ω 5% 0.1W
3526	4822 116 83303	1Ω 2W
3527	4822 117 11454	820Ω 1% 0.1W
3528	4822 117 10833	10k 1% 0.1W
3529	4822 051 20472	4k7 5% 0.1W
3530	4822 116 52297	68k 5% 0.5W
3531	4822 117 10833	10k 1% 0.1W
3533	4822 051 20159	15Ω 5% 0.1W
3535	4822 051 20273	27k 5% 0.1W
3536	4822 117 10837	100k 1% 0.1W
3537	4822 117 10833	10k 1% 0.1W
3538	4822 051 20332	3k3 5% 0.1W
3539	4822 117 10833	10k 1% 0.1W
3540	4822 117 10834	47k 1% 0.1W
3541	4822 117 10833	10k 1% 0.1W
3542	3198 012 11570	0Ω15 5% 1W
3543	4822 051 20478	4Ω7 5% 0.1W
3544	4822 051 20479	47Ω 5% 0.1W
3600	4822 050 22205	2M2 1% 0.6W
3601	4822 050 22205	2M2 1% 0.6W
3602	4822 051 20332	3k3 5% 0.1W
3603	4822 101 11319	100Ω LIN
3605	4822 051 20273	27k 5% 0.1W
3606	4822 051 10102	1k 2% 0.25W
3607	4822 051 20223	22k 5% 0.1W
3608	4822 051 20223	22k 5% 0.1W
3609	4822 101 11193	47k 30% LIN 0.1W
3610	4822 051 20683	68k 5% 0.1W
3611	4822 051 20822	8k2 5% 0.1W
3612	4822 051 20274	270k 5% 0.1W
3613	4822 051 20274	270k 5% 0.1W
3614	4822 050 21005	1M 1% 0.6W
3615	4822 050 18204	820k 1% 0.4W
3615	4822 116 52292	560k 5% 0.5W
3616	4822 116 52285	470k 5% 0.5W
3617	4822 050 11002	1k 1% 0.4W
3618	4822 051 10102	1k 2% 0.25W
3619	4822 051 20562	5k6 5% 0.1W
3620	4822 116 80176	1Ω 5% 0.5W
3620	4822 116 80676	1Ω5 5% 0.5W
3621	4822 116 80176	1Ω 5% 0.5W
3622	4822 116 80176	1Ω 5% 0.5W
3623	4822 117 10834	47k 1% 0.1W
3624	4822 052 10158	1Ω5 5% 0.33W
3625	4822 116 83872	220Ω 5% 0.5W
3626	4822 116 83872	220Ω 5% 0.5W
3627	4822 050 21003	10k 1% 0.6W
3630	4822 051 10102	1k 2% 0.25W
3631	4822 051 20332	3k3 5% 0.1W
3632	4822 117 10833	10k 1% 0.1W
3633	4822 050 21003	10k 1% 0.6W
3644	4822 117 10833	10k 1% 0.1W
3645	4822 116 52245	150k 5% 0.5W
3652	4822 051 20101	100Ω 5% 0.1W
3701	4822 117 10833	10k 1% 0.1W
3702	4822 117 10833	10k 1% 0.1W
3730	4822 117 10833	10k 1% 0.1W
3731	4822 117 10833	10k 1% 0.1W
3732	4822 051 20822	8k2 5% 0.1W
3733	4822 051 20822	8k2 5% 0.1W
3734	4822 117 10834	47k 1% 0.1W
3735	4822 117 10834	47k 1% 0.1W
3736	4822 051 10102	1k 2% 0.25W
3737	4822 051 10102	1k 2% 0.25W
3738	4822 117 11148	56k 1% 0.1W
3739	4822 117 11148	56k 1% 0.1W
3740	4822 051 20683	68k 5% 0.1W
3741	4822 051 20683	68k 5% 0.1W
3742	4822 116 52199	68Ω 5% 0.5W
3743	4822 116 52199	68Ω 5% 0.5W
3756	4822 117 10833	10k 1% 0.1W
3762	4822 051 20828	8Ω2 5% 0.1W
3765	4822 117 11507	6k8 1% 0.1W
3770	4822 117 10834	47k 1% 0.1W
3771	4822 116 83933	15k 1% 0.1W
3773	4822 116 83933	15k 1% 0.1W
3789	4822 051 20828	8Ω2 5% 0.1W
3790	4822 051 10102	1k 2% 0.25W
3792	4822 051 10102	1k 2% 0.25W
3900	4822 116 83868	150Ω 5% 0.5W
3901	4822 117 10353	150Ω 1% 0.1W
3902	4822 117 10353	150Ω 1% 0.1W
3903	4822 117 10353	150Ω 1% 0.1W
3905	4822 116 83883	470Ω 5% 0.5W
3906	4822 116 52201	75Ω 5% 0.5W
3907	4822 051 20561	560Ω 5% 0.1W
3908	4822 116 52201	75Ω 5% 0.5W
3909	4822 116 52201	75Ω 5% 0.5W
3910	4822 116 52201	75Ω 5% 0.5W
3911	4822 116 52201	75Ω 5% 0.5W
3913	4822 116 52201	75Ω 5% 0.5W
3915	4822 116 52201	75Ω 5% 0.5W
3916	4822 051 20822	8k2 5% 0.1W
3918	4822 051 20392	3k9 5% 0.1W
3919	4822 051 10102	1k 2% 0.25W
3920	4822 051 10102	1k 2% 0.25W
3921	4822 117 10353	150Ω 1% 0.1W
3922	4822 117 10353	150Ω 1% 0.1W
3923	4822 117 10353	150Ω 1% 0.1W
3924	4822 117 10353	150Ω 1% 0.1W
3925	4822 052 10688	6Ω8 5% 0.33W
3928	4822 051 20101	100Ω 5% 0.1W
3929	4822 117 10833	10k 1% 0.1W
3930	4822 051 20561	560Ω 5% 0.1W
3932	4822 116 52201	75Ω 5% 0.5W
3935	4822 116 52201	75Ω 5% 0.5W
3936	4822 117 10353	150Ω 1% 0.1W
3937	4822 117 10353	150Ω 1% 0.1W
3940	4822 117 10353	150Ω 1% 0.1W
3941	4822 117 10353	150Ω 1% 0.1W
3942	4822 051 20822	8k2 5% 0.1W
3944	4822 051 10102	1k 2% 0.25W
3945	4822 051 20392	3k9 5% 0.1W
3946	4822 051 10102	1k 2% 0.25W
3970	4822 051 20471	470Ω 5% 0.1W
3971	4822 117 10833	10k 1% 0.1W
3972	4822 117 10833	10k 1% 0.1W
3991	4822 116 52175	100Ω 5% 0.5W
3992	4822 051 20101	100Ω 5% 0.1W
3993	4822 051 20101	100Ω 5% 0.1W
3994	4822 116 52175	100Ω 5% 0.5W
3995	4822 116 52175	100Ω 5% 0.5W
3996	4822 116 52175	100Ω 5% 0.5W
3997	4822 116 52175	100Ω 5% 0.5W
3998	4822 116 52175	100Ω 5% 0.5W
4xxx	4822 051 10008	0Ω 5% 0.25W
4xxx	4822 051 20008	0Ω 5% 0.25W
9220	4822 051 20008	JUMPER
9225	4822 051 20008	JUMPER
9723	4822 051 20008	JUMPER
9724	4822 051 20008	JUMPER

5101	4822 146 11065	STANDBY TFM
5102	4822 157 70436	8.2µH
5103	4822 526 10704	BEAD 50MHz
5104	4822 157 11411	BEAD 100MHz
5105	4822 526 10704	BEAD 100MHz
5200	4822 157 11775	6.8µH 5%
5400	4822 157 11869	33µH 10%
5410	4822 146 11065	TFM SIG FIX
5411	4822 157 71097	0.56µH
5421	4822 157 11204	COIL LINE CORR.(29")
5421	4822 157 11839	COIL LINE CORR. (28")
5421	4822 157 11841	COIL LINE CORR. (28"WS,32"WS)
5422	4822 157 71535	COIL BRIDGE
5424	4822 157 63255	COIL BRIDGE
5430	8204 000 73321	LOT (29")
5430	8228 001 33243	LOT (25",28")
5461	4822 157 11411	BEAD 100MHz
5463	4822 157 11411	BEAD 100MHz
5465	4822 157 11411	BEAD 100MHz
5466	4822 157 71467	39U 10%
5467	4822 157 11411	BEAD 100MHz
5504	2422 549 43286	MAINS 35mH 1A5
5505	4822 157 11411	BEAD 100MHz
5506	2422 531 98042	TFM W8085-002 Y
5510	4822 157 11411	BEAD 100MHz
5620	4822 157 11771	0.09µH 10%

6103	4822 130 42488	BYD33D
6105	4822 130 34281	BZX79-B15
6106	4822 130 34499	BZX79-B20
6108	4822 130 30621	1N4148
6109	4822 130 31083	BYW55
6111	4822 130 32715	SB340
6120	4822 130 30621	1N4148
6121	4822 130 30621	1N4148
6122	3198 010 53980	BZX79-B3V9
6200	9322 149 10685	BZM55-C33
6201	4822 130 83757	BAS216
6202	4822 130 83757	BAS216
6203	4822 130 10852	BZX284-C6V8
6204	4822 130 10852	BZX284-C6V8
6205	4822 130 83757	BAS216
6405	4822 130 11027	BZX284-C33
6406	4822 130 83757	BAS216
6407	4822 130 83757	BAS216
6408	4822 130 42488	BYD33D
6421	4822 130 10753	BY359X-1500
6422	4822 130 10218	BY229X-800
6442	9322 129 42685	BZM55-C15
6461	4822 130 82512	BYV29F-400
6462	4822 130 41487	BYV95C
6464	5322 130 31938	BYV27-200
6468	4822 130 42488	BYD33D
6480	4822 130 42488	BYD33D
6481	4822 130 31024	BZX79-B18
6482	4822 130 83757	BAS216
6499	4822 130 83757	BAS216
6501	4822 130 31083	BYW55
6502	4822 130 31083	BYW55
6503	4822 130 31083	BYW55
6504	4822 130 31083	BYW55
6505	4822 130 34281	BZX79-B15
6506	4822 130 30621	1N4148
6507	4822 130 80791	BYV28-200/20
6508	4822 130 11415	BYV28-400/20
6510	4822 130 34281	BZX79-B15
6511	4822 130 83757	BAS216
6512	4822 130 83757	BAS216
6514	5322 130 31932	BZT03-C200
6515	4822 130 32904	BZV85-C5V6
6516	4822 130 83757	BAS216
6517	4822 130 31983	BAT85
6518	4822 130 83757	BAS216
6520	4822 130 42488	BYD33D
6521	4822 130 83757	BAS216
6522	4822 130 83757	BAS216
6600	4822 130 31983	BAT85
6616	4822 130 83757	BAS216
6619	4822 130 42488	BYD33D
6620	5322 130 31938	BYV27-200
6621	4822 130 42488	BYD33D
6622	5322 130 33635	BZV85-C8V2
6623	4822 130 83757	BAS216

7100	4822 130 44568	BC557B
7101	4822 130 40959	BC547B
7102	4822 130 11417	STP3NB60FP
7104	4822 130 11418	TCDT1102G
7407	4822 130 60511	BC847B
7408	9332 592 40126	BC368
7409	4822 130 60511	BC847B
7421	4822 130 63666	BU2520DF
7480	4822 130 11417	STP3NB60FP
7481	4822 130 44568	BC557B
7482	4822 130 11418	TCDT1102G
7499	4822 130 60373	BC856B
7502	4822 130 61675	BF487
7504	9322 126 65687	STP5NB60FP
7505	4822 130 60373	BC856B
7506	4822 209 81397	TL431CLPST
7510	4822 130 60511	BC847B
7511	4822 130 60373	BC856B
7528	4822 130 40981	BC337-25
7529	4822 130 60511	BC847B
7600	4822 130 44461	BC546B
7602	4822 130 60511	BC847B
7603	4822 130 60373	BC856B
7605	4822 130 60511	BC847B
7606	4822 130 60511	BC847B
7610	4822 130 11418	TCDT1102G
7620	4822 209 90009	TDA8177
7641	4822 130 60511	BC847B
7652	4822 130 60511	BC847B
7720	4822 130 60511	BC847B
7721	4822 130 60511	BC847B
7722	4822 130 60373	BC856B
7723	4822 130 60373	BC856B
7724	4822 130 60511	BC847B
7725	4822 130 60511	BC847B
7730	4822 130 60511	BC847B
7750	4822 209 32269	TDA2616/N1
7900	4822 130 40959	BC547B
7901	4822 130 40959	BC547B
7905	9332 592 40126	BC368
7906	4822 209 12334	L4940V85
7907	4822 130 60511	BC847B

Small Signal Panel [B]

Various

1001	2422 543 89022	RES XTL 6M000
1301	2422 540 98456	RES 12MHz
1305	2422 543 01092	RES XTL 4M433619
1308	2422 543 01097	RES XTL 3M579545
1405	2422 549 44369	FIL SAW 38MHz
1407	2422 549 44324	FIL TPWCC04BS
1408	2422 549 44372	FIL SAW 38MHz
1409	2422 025 16542	2P MALE
1651	2422 543 89019	RES XTL 8M432
1701	2422 543 89018	RES XTL 12MHz

⊣⊢

2001	4822 126 11671	33pF
2002	4822 126 11669	27pF
2003	4822 126 13879	220nF 20% 16V
2004	4822 126 13879	220nF 20% 16V
2005	4822 126 14305	100nF 10% 16V
2006	4822 126 14305	100nF 10% 16V
2007	4822 126 14305	100nF 10% 16V
2008	4822 126 14305	100nF 10% 16V
2009	4822 122 33777	47pF 5% 63V
2010	4822 122 33777	47pF 5% 63V
2011	4822 122 33777	47pF 5% 63V
2012	4822 122 33777	47pF 5% 63V
2013	4822 124 12095	100µF 20% 16V
2014	4822 126 14305	100nF 10% 16V
2015	4822 126 14305	100nF 10% 16V
2016	4822 124 12095	100µF 20% 16V
2017	4822 126 14305	100nF 10% 16V
2019	4822 126 14305	100nF 10% 16V
2020	4822 126 13883	220pF 5% 50V
2022	4822 126 14305	100nF 10% 16V
2023	4822 126 14305	100nF 10% 16V
2024	4822 126 14305	100nF 10% 16V
2025	4822 126 14305	100nF 10% 16V
2026	4822 126 14305	100nF 10% 16V
2027	4822 126 14305	100nF 10% 16V
2028	4822 126 14305	100nF 10% 16V
2029	4822 126 14305	100nF 10% 16V
2031	4822 126 14305	100nF 10% 16V
2032	4822 126 14305	100nF 10% 16V
2033	4822 126 14226	82pF 5% 50V
2034	4822 126 14226	82pF 5% 50V
2035	4822 126 14226	82pF 5% 50V
2036	4822 126 14226	82pF 5% 50V
2037	4822 126 14226	82pF 5% 50V
2038	4822 126 14305	100nF 10% 16V
2300	4822 124 12095	100µF 20% 16V
2303	5322 126 11583	10nF 10% 50V
2304	4822 122 33741	10pF 10% 50V
2306	4822 126 13881	470pF 5% 50V
2307	4822 126 14305	100nF 10% 16V
2308	4822 122 33741	10pF 10% 50V
2313	4822 121 70159	0.1µF 16V
2314	4822 124 12095	100µF 20% 16V
2315	4822 126 14305	100nF 10% 16V
2317	4822 126 14491	2.2µF 10V
2318	4822 126 14494	22nF 10% 25V
2319	5322 126 11583	10nF 10% 50V
2320	4822 122 33741	10pF 10% 50V
2321	4822 126 14305	100nF 10% 16V
2322	4822 126 14305	100nF 10% 16V
2323	4822 126 14305	100nF 10% 16V
2324	5322 126 11583	10nF 10% 50V
2325	4822 126 14305	100nF 10% 16V
2328	4822 122 33761	22pF 5% 50V
2329	4822 126 14305	100nF 10% 16V
2330	4822 126 14305	100nF 10% 16V
2331	4822 126 14305	100nF 10% 16V
2332	4822 126 14305	100nF 10% 16V
2333	4822 126 14491	2.2µF 10V
2334	4822 126 14491	2.2µF 10V
2335	4822 124 80349	47µF 20% 6.3V
2336	4822 126 14491	2.2µF 10V
2338	5322 126 11583	10nF 10% 50V
2340	4822 124 23002	10µF 16V
2341	4822 124 12095	100µF 20% 16V
2350	4822 126 14305	100nF 10% 16V
2351	4822 126 14305	100nF 10% 16V
2352	4822 126 14305	100nF 10% 16V
2356	4822 126 14305	100nF 10% 16V
2357	4822 126 14305	100nF 10% 16V
2358	5322 126 11579	3.3nF 10% 63V
2359	4822 122 33752	15pF 5% 50V
2361	3198 016 31580	1P5 50V
2362	4822 126 11663	12pF
2365	4822 126 14305	100nF 10% 16V
2366	4822 126 14305	100nF 10% 16V
2367	4822 126 14305	100nF 10% 16V
2368	4822 126 14305	100nF 10% 16V
2369	4822 126 14305	100nF 10% 16V
2370	4822 126 14305	100nF 10% 16V
2371	4822 126 13193	4.7nF 10% 63V
2372	4822 126 14043	1µF 20% 16V
2373	4822 126 14305	100nF 10% 16V
2374	4822 126 14491	2.2µF 10V
2375	4822 126 14494	22nF 10% 25V
2376	4822 126 14305	100nF 10% 16V
2377	4822 124 12095	100µF 20% 16V
2378	4822 126 14305	100nF 10% 16V
2384	4822 126 14305	100nF 10% 16V
2406	4822 126 13883	220pF 5% 50V
2407	4822 126 13956	68pF 5% 63V
2408	3198 016 32780	2P7 50V
2409	4822 126 14491	2.2µF 10V
2410	4822 126 14472	1µF 10% 10V
2411	4822 126 14305	100nF 10% 16V
2412	4822 126 13193	4.7nF 10% 63V
2413	4822 124 80151	47µF 16V
2417	3198 017 44740	470nF 10V
2418	4822 126 13956	68pF 5% 63V
2420	4822 122 33753	150pF 5% 50V
2501	4822 122 33777	47pF 5% 63V
2502	4822 122 32927	220nF 20% 50V
2503	4822 122 32927	220nF 20% 50V
2504	4822 122 32927	220nF 20% 50V
2505	4822 122 32927	220nF 20% 50V
2508	4822 124 12095	100µF 20% 16V
2546	4822 124 23002	10µF 16V
2547	4822 124 23002	10µF 16V
2548	4822 124 23002	10µF 16V
2549	4822 124 23002	10µF 16V
2550	4822 126 14241	330P 50V
2551	5322 126 11579	3.3nF 10% 63V
2609	3198 016 31020	0603 25V 1nF
2610	4822 126 14238	2N2 50V
2611	5322 126 11578	1nF 10% 50V
2629	4822 122 32927	220nF 20% 50V
2636	4822 122 32927	220nF 20% 50V
2637	4822 122 32927	220nF 20% 50V
2638	4822 122 32927	220nF 20% 50V
2640	4822 126 13879	220nF 20% 16V
2641	4822 122 32927	220nF 20% 50V
2642	4822 122 32927	220nF 20% 50V
2651	4822 126 14305	100nF 10% 16V
2652	4822 122 33777	47pF 5% 63V
2653	4822 122 32927	220nF 20% 50V
2654	4822 126 13881	470pF 5% 50V
2655	4822 126 13881	470pF 5% 50V
2656	4822 126 13881	470pF 5% 50V
2657	4822 126 13881	470pF 5% 50V
2658	4822 126 13881	470pF 5% 50V
2661	4822 122 32927	220nF 20% 50V
2662	4822 122 32927	220nF 20% 50V
2663	4822 126 13881	470pF 5% 50V
2664	4822 126 13881	470pF 5% 50V
2665	4822 124 12095	100µF 20% 16V
2666	4822 124 12095	100µF 20% 16V
2667	3198 016 33380	3P3 50V
2668	3198 016 33380	3P3 50V
2669	4822 124 23002	10µF 16V
2670	5322 126 11583	10nF 10% 50V
2673	3198 016 31020	1nF 25V
2674	3198 016 31020	1nF 25V
2675	4822 124 23002	10µF 16V
2677	3198 030 82280	2U2 20% 50V
2677	4822 124 23002	10µF 16V
2678	4822 124 23002	10µF 16V
2679	4822 126 14305	100nF 10% 16V
2680	4822 124 23002	10µF 16V
2681	4822 126 14305	100nF 10% 16V
2682	4822 124 23002	10µF 16V
2685	3198 016 31020	1nF 25V
2686	3198 016 31020	1nF 25V
2690	4822 126 14305	100nF 10% 16V
2691	4822 126 14305	100nF 10% 16V
2692	4822 126 14305	100nF 10% 16V
2693	4822 126 13883	220pF 5% 50V
2702	4822 124 23002	10µF 16V
2703	4822 126 14305	100nF 10% 16V
2704	4822 124 23002	10µF 16V
2706	4822 124 12095	100µF 20% 16V
2707	4822 126 14305	100nF 10% 16V
2708	4822 124 23002	10µF 16V
2709	4822 126 14305	100nF 10% 16V
2710	4822 124 23002	10µF 16V
2712	4822 124 23002	10µF 16V
2713	4822 126 14305	100nF 10% 16V
2717	4822 126 14218	3.9pF 50V
2718	4822 126 11669	27pF
2719	4822 126 11663	12pF
2720	4822 126 14218	3.9pF 50V
2721	4822 126 11669	27pF
2723	4822 126 11663	12pF
2724	4822 126 14218	3.9pF 50V
2725	4822 126 11669	27pF
2726	4822 126 11663	12pF
2728	4822 126 14305	100nF 10% 16V
2729	4822 126 14225	56pF 5% 50V
2730	4822 126 14494	22nF 10% 25V
2731	4822 122 31765	100pF 2% 63V
2733	4822 126 14494	22nF 10% 25V
2738	4822 126 14494	22nF 10% 25V
2743	4822 126 14494	22nF 10% 25V
2747	4822 126 14507	18pF 5% 50V
2748	4822 126 14507	18pF 5% 50V
2755	4822 126 14305	100nF 10% 16V
2756	4822 126 14305	100nF 10% 16V
2757	4822 124 23002	10µF 16V
2758	4822 126 14305	100nF 10% 16V
2759	4822 126 14305	100nF 10% 16V
2760	4822 126 14305	100nF 10% 16V
2761	4822 126 14305	100nF 10% 16V
2762	4822 126 14305	100nF 10% 16V
2763	4822 126 14305	100nF 10% 16V
2764	4822 126 14305	100nF 10% 16V
2765	4822 126 14305	100nF 10% 16V
2766	4822 126 14305	100nF 10% 16V
2767	4822 126 14305	100nF 10% 16V
2770	4822 126 14305	100nF 10% 16V
2771	4822 126 14305	100nF 10% 16V
2772	4822 126 14305	100nF 10% 16V
2773	4822 126 14305	100nF 10% 16V
2774	4822 126 14305	100nF 10% 16V
2776	4822 126 14305	100nF 10% 16V
2785	4822 126 14305	100nF 10% 16V
2786	4822 126 14305	100nF 10% 16V
2788	4822 126 14305	100nF 10% 16V
2790	4822 126 14305	100nF 10% 16V
2792	4822 126 14305	100nF 10% 16V
2795	4822 126 14305	100nF 10% 16V
2796	4822 126 14305	100nF 10% 16V
2797	4822 126 13956	68pF 5% 63V
2798	3198 016 36810	680P 25V
2902	5322 126 11583	10nF 10% 50V

⊟

3001	4822 051 30472	4k7 5% 0.062W
3002	4822 051 30472	4k7 5% 0.062W
3003	4822 051 30223	22k 5% 0.062W
3006	4822 051 30471	470Ω 5% 0.062W
3007	4822 117 13521	470Ω 5% 0.63W
3008	4822 117 13526	150Ω 5% 0.63W
3009	4822 051 30689	68Ω 5% 0.063W
3011	4822 051 30471	470Ω 5% 0.062W
3012	4822 051 30471	470Ω 5% 0.062W
3013	4822 051 30103	10k 5% 0.062W
3014	4822 051 30682	6k8 5% 0.062W
3015	4822 051 30474	470k 5% 0.062W
3016	4822 051 30152	1k5 5% 0.062W
3017	4822 051 30472	4k7 5% 0.062W
3018	4822 051 30103	10k 5% 0.062W
3019	4822 051 30472	4k7 5% 0.062W
3020	4822 051 30103	10k 5% 0.062W
3021	4822 051 30103	10k 5% 0.062W
3023	4822 051 30471	470Ω 5% 0.062W
3024	4822 051 30273	27k 5% 0.062W
3025	4822 051 30221	220Ω 5% 0.062W
3026	4822 051 30103	10k 5% 0.062W
3027	4822 117 12925	47k 1% 0.063W
3028	4822 051 30471	470Ω 5% 0.062W
3029	4822 051 30103	10k 5% 0.062W
3030	4822 051 30103	10k 5% 0.062W
3031	4822 051 30103	10k 5% 0.062W
3032	4822 051 30471	470Ω 5% 0.062W
3033	4822 051 30103	10k 5% 0.062W
3034	4822 051 30101	100Ω 5% 0.062W
3035	4822 117 13522	100Ω 5% 0.63W
3039	4822 051 30101	100Ω 5% 0.062W
3040	4822 051 30103	10k 5% 0.062W
3041	4822 051 30562	5k6 5% 0.063W
3044	2120 108 92846	4k7 5%
3058	4822 051 30682	6k8 5% 0.062W

3059	2322 704 66201	620Ω 1%
3060	4822 051 30103	10k 5% 0.062W
3061	4822 051 30103	10k 5% 0.062W
3062	4822 051 30103	10k 5% 0.062W
3064	4822 117 13522	100Ω 5% 0.63W
3073	4822 051 30471	470Ω 5% 0.062W
3074	4822 051 30471	470Ω 5% 0.062W
3075	4822 051 30103	10k 5% 0.062W
3076	4822 051 30471	470Ω 5% 0.062W
3077	4822 051 30272	2k7 5% 0.062W
3078	4822 051 30471	470Ω 5% 0.062W
3079	4822 051 30471	470Ω 5% 0.062W
3080	4822 051 30103	10k 5% 0.062W
3081	4822 051 30471	470Ω 5% 0.062W
3083	4822 051 30471	470Ω 5% 0.062W
3084	4822 051 30103	10k 5% 0.062W
3085	4822 051 30471	470Ω 5% 0.062W
3086	4822 051 30471	470Ω 5% 0.062W
3087	4822 051 30471	470Ω 5% 0.062W
3088	4822 051 30471	470Ω 5% 0.062W
3090	4822 051 30471	470Ω 5% 0.062W
3091	4822 051 30471	470Ω 5% 0.062W
3092	4822 051 30221	220Ω 5% 0.062W
3300	2322 750 63908	3Ω9 5%
3304	2322 750 63908	3Ω9 5%
3306	4822 051 30221	220Ω 5% 0.062W
3307	4822 051 30183	18k 5% 0.062W
3308	4822 051 30684	680k 5% 0.062W
3310	4822 117 12925	47k 1% 0.063W
3311	4822 117 13632	100k 1% 0.62W
3314	4822 051 30103	10k 5% 0.062W
3315	4822 051 30102	1k 5% 0.062W
3316	4822 051 30123	12k 5% 0.062W
3317	4822 051 30221	220Ω 5% 0.062W
3318	4822 051 30102	1k 5% 0.062W
3320	4822 051 30101	100Ω 5% 0.062W
3321	4822 051 30101	100Ω 5% 0.062W
3322	4822 051 10102	1k 2% 0.25W
3324	4822 051 30222	2k2 5% 0.062W
3327	4822 117 13632	100k 1% 0.62W
3328	4822 051 30393	39k 5% 0.062W
3329	4822 117 13568	6Ω8 5%
3330	4822 051 30332	3k3 5% 0.062W
3331	4822 051 30102	1k 5% 0.062W
3333	4822 051 30102	1k 5% 0.062W
3334	4822 051 30102	1k 5% 0.062W
3335	4822 051 30332	3k3 5% 0.062W
3336	4822 051 30102	1k 5% 0.062W
3337	4822 117 12903	1k8 1% 0.063W
3338	4822 051 30682	6k8 5% 0.062W
3340	4822 051 30101	100Ω 5% 0.062W
3341	4822 051 30101	100Ω 5% 0.062W
3342	4822 051 30101	100Ω 5% 0.062W
3343	4822 051 30683	68k 5% 0.062W
3344	4822 051 30222	2k2 5% 0.062W
3345	4822 051 30103	10k 5% 0.062W
3346	4822 051 30333	33k 5% 0.062W
3347	4822 051 30223	22k 5% 0.062W
3348	4822 051 30222	2k2 5% 0.062W
3362	4822 051 30103	10k 5% 0.062W
3363	4822 051 30102	1k 5% 0.062W
3364	4822 051 30683	68k 5% 0.062W
3365	4822 051 30472	4k7 5% 0.062W
3366	4822 051 30102	1k 5% 0.062W
3367	4822 051 30102	1k 5% 0.062W
3370	4822 051 30101	100Ω 5% 0.062W
3371	4822 051 30479	47Ω 5% 0.062W
3372	4822 051 30471	470Ω 5% 0.062W
3376	4822 051 30101	100Ω 5% 0.062W
3377	4822 051 30101	100Ω 5% 0.062W
3378	4822 051 30153	15k 5% 0.062W
3382	4822 051 30471	470Ω 5% 0.062W
3384	4822 051 30101	100Ω 5% 0.062W
3385	4822 051 30471	470Ω 5% 0.062W
3386	4822 051 30223	22k 5% 0.062W
3388	4822 051 30102	1k 5% 0.062W
3389	4822 117 12925	47k 1% 0.063W
3390	4822 051 30153	15k 5% 0.062W
3391	4822 051 30683	68k 5% 0.062W
3393	4822 117 13632	100k 1% 0.62W
3394	4822 051 30472	4k7 5% 0.062W
3400	4822 117 11152	4Ω7 5%
3406	4822 051 30479	47Ω 5% 0.062W
3411	4822 051 30472	4k7 5% 0.062W
3414	4822 051 30472	4k7 5% 0.062W
3415	4822 117 12902	8k2 1% 0.063W
3416	4822 117 13568	6Ω8 5%
3418	4822 051 30391	390Ω 5% 0.062W
3419	4822 051 30759	75Ω 5% 0.062W
3435	4822 051 30472	4k7 5% 0.062W
3436	4822 051 30221	220Ω 5% 0.062W
3437	4822 051 30102	1k 5% 0.062W
3439	4822 051 30471	470Ω 5% 0.062W
3441	4822 051 30393	39k 5% 0.062W
3445	4822 051 30471	470Ω 5% 0.062W
3446	4822 051 30101	100Ω 5% 0.062W
3532	4822 051 30102	1k 5% 0.062W
3533	4822 051 30103	10k 5% 0.062W
3540	4822 051 30103	10k 5% 0.062W
3550	4822 051 30102	1k 5% 0.062W
3551	4822 051 30102	1k 5% 0.062W
3552	4822 051 30472	4k7 5% 0.062W
3610	4822 117 12925	47k 1% 0.063W
3611	4822 117 12925	47k 1% 0.063W
3612	4822 117 12925	47k 1% 0.063W
3613	4822 117 12925	47k 1% 0.063W
3614	4822 117 12925	47k 1% 0.063W
3615	4822 117 12925	47k 1% 0.063W
3616	4822 051 30682	6k8 5% 0.062W
3617	4822 051 30682	6k8 5% 0.062W
3621	4822 051 30105	1M 5% 0.062W
3636	4822 051 30105	1M 5% 0.062W
3637	4822 051 30105	1M 5% 0.062W
3638	4822 051 30105	1M 5% 0.062W
3642	4822 051 30105	1M 5% 0.062W
3644	4822 051 30105	1M 5% 0.062W
3653	3198 021 90030	JUMPER
3654	3198 021 90030	JUMPER
3655	4822 051 30101	100Ω 5% 0.062W
3656	4822 051 30101	100Ω 5% 0.062W
3657	4822 051 30334	330k 5% 0.062W
3658	4822 051 30334	330k 5% 0.062W
3659	4822 051 30334	330k 5% 0.062W
3660	4822 051 30334	330k 5% 0.062W
3661	4822 117 11817	1k2 1% 1/16W
3662	4822 117 11817	1k2 1% 1/16W
3663	4822 117 11817	1k2 1% 1/16W
3665	4822 051 30272	2k7 5% 0.062W
3673	4822 051 30472	4k7 5% 0.062W
3676	4822 117 11817	1k2 1% 1/16W
3677	4822 051 30334	330k 5% 0.062W
3678	4822 117 11817	1k2 1% 1/16W
3679	4822 051 30334	330k 5% 0.062W
3680	4822 117 11817	1k2 1% 1/16W
3683	4822 051 30272	2k7 5% 0.062W
3684	3198 021 90030	JUMPER
3685	3198 021 90030	JUMPER
3688	3198 021 90030	JUMPER
3689	3198 021 90030	JUMPER
3702	4822 117 12139	22Ω 5% 0.062W
3703	4822 051 30101	100Ω 5% 0.062W
3705	4822 051 30101	100Ω 5% 0.062W
3706	4822 051 30109	10Ω 5% 0.062W
3707	4822 051 30392	3k9 5% 0.063W
3708	4822 051 30272	2k7 5% 0.062W
3709	3198 021 90030	JUMPER
3710	4822 051 30391	390Ω 5% 0.062W
3711	4822 051 30102	1k 5% 0.062W
3712	4822 051 30391	390Ω 5% 0.062W
3713	4822 051 30391	390Ω 5% 0.062W
3714	4822 117 12139	22Ω 5% 0.062W
3716	4822 051 30472	4k7 5% 0.062W
3717	4822 051 30472	4k7 5% 0.062W
3718	4822 051 30221	220Ω 5% 0.062W
3719	4822 117 13574	1Ω5 5% 1206
3720	4822 117 13574	1Ω5 5% 1206
3721	4822 117 13572	22Ω 5% 1206
3722	4822 117 13572	22Ω 5% 1206
3725	4822 051 30105	1M 5% 0.062W
3728	4822 051 30101	100Ω 5% 0.062W
3731	4822 051 30101	100Ω 5% 0.062W
3732	4822 051 10102	1k 2% 0.25W
3733	4822 051 30101	100Ω 5% 0.062W
3739	4822 051 30101	100Ω 5% 0.062W
3740	3198 021 90030	JUMPER
3741	4822 051 30102	1k 5% 0.062W
3744	4822 051 30102	1k 5% 0.062W
3745	4822 051 30102	1k 5% 0.062W
3746	4822 051 30472	4k7 5% 0.062W
3747	4822 051 30689	68Ω 5%
3748	4822 051 30689	68Ω 5%
3749	4822 051 30689	68Ω 5% 0.063W
3754	4822 051 30109	10Ω 5% 0.062W
3755	3198 021 90030	JUMPER
3757	3198 021 90030	JUMPER
3759	3198 021 90030	JUMPER
3790	4822 117 13522	100Ω 5% 0.63W
3791	4822 117 13522	100Ω 5% 0.63W
3792	4822 117 13522	100Ω 5% 0.63W
3793	4822 117 12662	10Ω 5%
3793	4822 117 13522	100Ω 5% 0.63W
3794	4822 117 12662	10Ω 5%
3794	4822 117 13522	100Ω 5% 0.63W
3795	4822 117 12662	10Ω 5%
3795	4822 117 13522	100Ω 5% 0.63W
3796	4822 051 30101	100Ω 5% 0.062W
3796	4822 051 30109	10Ω 5% 0.062W
3797	4822 051 30101	100Ω 5% 0.062W
3900	4822 051 30221	220Ω 5% 0.062W
3901	4822 051 30221	220Ω 5% 0.062W
3903	4822 051 30221	220Ω 5% 0.062W
3905	4822 051 30221	220Ω 5% 0.062W
3906	4822 051 30101	100Ω 5% 0.062W
3907	4822 051 30221	220Ω 5% 0.062W
3909	4822 051 30221	220Ω 5% 0.062W
3910	4822 051 30221	220Ω 5% 0.062W
3911	4822 051 30101	100Ω 5% 0.062W

5301	4822 157 11876	6.8µH 10%
5302	4822 157 11876	6.8µH 10%
5403	2422 549 44461	IND VAR 40mH
5404	2422 535 95427	100mH
5405	2422 535 95427	IND FXD 100mHz 120R
5406	3198 018 33980	3U9 10%
5407	3198 018 56880	6U8 10%
5408	2422 549 44459	IND VAR 78mH
5409	3198 018 51080	1U 10%
5410	3198 018 33370	0U33 10%
5651	2422 549 43769	100mH
5652	2422 549 43769	100mH
5653	2422 549 43769	100mH
5654	4822 157 11716	BLM21P300SPT
5701	4822 157 71206	BLM21A601SPT
5702	2422 535 95427	100mH
5703	4822 157 11716	BLM21P300SPT
5704	4822 157 11716	BLM21P300SPT
5705	2422 535 95427	100mH
5706	4822 157 11778	5U6 10%
5707	4822 157 11781	BLM11A601SPT1
5708	4822 157 11778	5U6 10%
5709	4822 157 11778	5U6 10%
5710	4822 157 11778	5U6 10%
5711	4822 157 11781	BLM11A601SPT1
5713	4822 157 11781	BLM11A601SPT1
5718	3198 018 33370	0U33 10%
5720	4822 157 11781	BLM11A601SPT1
5910	4822 157 11781	BLM11A601SPT1

6001	4822 130 11528	1PS76SB10
6003	4822 130 11528	1PS76SB10
6303	4822 130 11594	BZX284-C47
6304	4822 130 83757	BAS216
6306	9322 129 37685	BZM55-C5V6
6307	4822 130 11528	1PS76SB10
6309	4822 130 83757	BAS216
6310	9322 129 38685	BZM55-C6V8
6311	9322 149 08685	BZM55-C22
6319	4822 130 83757	BAS216
6334	4822 130 83757	BAS216
6403	4822 130 10414	BA792
6652	9322 129 40685	BZM55-C10
6653	4822 130 83757	BAS216

7001	9352 629 88557	SAA5801/011 V30
7002	5322 130 42756	BC857C
7003	3198 010 42310	BC847BW
7004	3198 010 42310	BC847BW
7005	9322 116 74668	LD1117D33
7006	3104 317 42211	SOFTW.ASSY 310431702211
7007	9322 136 53668	MSM51V18165D-60JS
7008	3198 010 42310	BC847BW
7009	3198 010 42310	BC847BW
7010	5322 130 42756	BC857C
7011	4822 209 17377	M24C32-WMN6/PROG
7301	9352 625 23518	TDA9330H/N2
7303	5322 130 42756	BC857C
7308	9340 310 30215	PDTC144ET
7309	9340 310 30215	PDTC144ET
7310	9340 310 30215	PDTC144ET
7311	3198 010 42310	BC847BW
7312	3198 010 42310	BC847BW
7320	3198 010 42310	BC847BW
7322	3198 010 42310	BC847BW
7323	9352 625 24518	TDA9321H/N2

7324	5322 130 63679	BC847CW
7403	4822 130 60511	BC847B
7407	4822 130 60373	BC856B
7411	4822 130 60511	BC847B
7651	9322 143 53671	MSP3415D-FH-B3
7651	9322 149 63671	MSP3451G-FH-A1
7652	9351 874 90118	74HC4052PW
7656	9340 425 20115	BC847BS
7658	9340 425 20115	BC847BS
7663	9340 425 20115	BC847BS
7674	3198 010 42310	BC847BW
7675	9351 874 90118	74HC4052PW
7680	3198 010 42310	BC847BW
7681	3198 010 42310	BC847BW
7701	5322 130 42756	BC857C
7702	3198 010 42310	BC847BW
7704	4822 209 73852	PMBT2369
7708	4822 209 90034	SAA4990H/V0
7709	9352 640 20557	SAA4978H/V203
7713	9322 116 74668	LD1117D33
7714	4822 209 17307	MSM54V12222A-30JS
7715	4822 209 17307	MSM54V12222A-30JS
7716	2422 486 80737	IC SOCKET 32P
	3104 319 42341	IC SOFTWARE

Main Switch Panel [E]

Various

0151	4822 256 91766	LED HOLDER
0201	2422 025 16268	2P MALE
0202	2422 025 16374	2P MALE
0923	2412 020 00724	2P MALE
0947	4822 267 10734	5P MALE
1910	4822 130 91478	IR RECEIVER
1951	4822 276 14024	2P 4/128A

2930	4822 124 41584	100µF 20% 10V

3957	4822 053 21335	3M3 5% 0.5W
3966	4822 053 21335	3M3 5% 0.5W
3978	4822 051 20101	100Ω 5% 0.1W
3982	4822 117 13577	330Ω 1% 1.25W

6901	4822 130 10859	TLDR5400

CRT Panel [F]

Various

0298	2422 500 80052	9P FEMALE
0340	3104 311 02321	CABLE 11P 400mm
0383	2422 025 16382	3P MALE

2300	4822 124 40764	22µF 100 V
2301	4822 124 40196	220µF 20% 16V
2302	5322 122 32286	3.3pF 5% 50V
2303	5322 122 32268	470pF 10% 50V
2304	4822 121 41856	22nF 5% 250V
2305	4822 124 41751	47µF 20% 50V
2306	4822 126 14585	100nF 10% 50V
2307	5322 122 32654	22nF 10% 63V
2308	4822 126 13486	15pF 2% 63V
2309	5322 122 32654	22nF 10% 63V
2310	4822 126 13689	18pF 1% 63V
2312	5322 122 32658	22pF 5% 50V
2313	4822 124 11565	10µF 20% 250V
2316	4822 121 40518	100nF 10% 250V
2317	5322 121 44356	4.7nF 5% 2KV
2318	5322 122 32654	22nF 10% 63V
2320	4822 126 13838	100nF 20% 50V
2321	5322 122 32531	100pF 5% 50V
2322	5322 122 32531	100pF 5% 50V
2323	5322 122 32531	100pF 5% 50V
2325	4822 126 14585	100nF 10% 50V

3300	4822 052 10109	10Ω 5% 0.33W
3301	4822 053 12103	10k 5% 3W
3302	4822 051 20182	1k8 5% 0.1W
3303	4822 117 10965	18k 1% 0.1W
3304	4822 117 11454	820Ω 1% 0.1W
3305	4822 117 13577	330Ω 1% 1.25W
3306	4822 051 20478	4Ω7 5% 0.1W
3307	4822 051 20109	10Ω 5% 0.1W
3308	4822 117 11148	56k 1% 0.1W
3309	4822 117 10353	150Ω 1% 0.1W
3310	4822 051 10102	1k 2% 0.25W
3311	4822 051 20101	100Ω 5% 0.1W
3312	4822 117 11449	2k2 1% 0.1W
3313	4822 116 83872	220Ω 5% 0.5W
3314	4822 116 83872	220Ω 5% 0.5W
3315	4822 117 11139	1k5 1% 0.1W
3316	4822 117 11148	56k 1% 0.1W
3317	4822 051 20122	1k2 5% 0.1W
3318	4822 051 20159	15Ω 5% 0.1W
3319	4822 117 11454	820Ω 1% 0.1W
3320	4822 051 10102	1k 2% 0.25W
3334	4822 050 11002	1k 1% 0.4W
3335	4822 051 10102	1k 2% 0.25W
3336	4822 051 10102	1k 2% 0.25W
3337	4822 051 10102	1k 2% 0.25W
3338	3198 013 01020	1k 2% 1/2W
3339	3198 013 01020	1k 2% 1/2W
3340	3198 013 01020	1k 2% 1/2W
3341	4822 052 10151	150Ω 5% 0.33W
3342	4822 051 20471	470Ω 5% 0.1W
3344	4822 116 52191	33Ω 5% 0.5W
3345	4822 116 52191	33Ω 5% 0.5W
3347	3198 013 01520	1k5 2% 1/2W
3348	4822 050 11204	120k 1% 0.4W
3349	3198 013 01020	1k 2% 1/2W
3350	4822 116 83883	470Ω 5% 0.5W
3351	4822 116 83883	470Ω 5% 0.5W
3352	4822 116 83883	470Ω 5% 0.5W
3354	4822 117 11449	2k2 1% 0.1W
3355	4822 051 20478	4Ω7 5% 0.1W
3356	4822 051 10102	1k 2% 0.25W
3357	4822 051 20478	4Ω7 5% 0.1W
4xxx	4822 051 10008	0Ω 5% 0.25W
4xxx	4822 051 20008	0Ω 5% 0.25W

5300	2422 531 98035	TFM S13974-01 Y

6305	4822 130 30842	BAV21
6306	4822 130 30842	BAV21
6307	4822 130 30842	BAV21
6310	4822 130 83757	BAS216

7300	4822 130 44154	BF199
7301	4822 130 42589	BF370
7302	5322 130 41888	BD140-16
7303	5322 130 41886	BD139-16
7307	9352 561 40112	TDA6108
8317	3104 311 01901	CABLE 2P 560mm
8325	3104 311 01911	CABLE 3P 680mm

Side I/O Panel [O]

Various

0900	2422 026 04926	4P FEMALE
0901	4822 267 10975	3P
0902	4822 267 31014	HEADPHONE SOCKET
0936	2422 025 12485	11P MALE

2905	4822 122 33177	10nF 20% 50V
2906	4822 122 33177	10nF 20% 50V

3901	4822 051 20101	100Ω 5% 0.1W
3902	4822 116 52201	75Ω 5% 0.5W
3903	4822 051 20101	100Ω 5% 0.1W
3904	4822 116 52201	75Ω 5% 0.5W
3905	4822 050 11002	1k 1% 0.4W
3906	4822 050 11002	1k 1% 0.4W
3907	4822 117 10834	47k 1% 0.1W
3908	4822 050 11002	1k 1% 0.4W
3909	4822 117 10834	47k 1% 0.1W
3910	4822 116 52276	3k9 5% 0.5W
3911	4822 050 21003	10k 1% 0.6W
3912	4822 050 21003	10k 1% 0.6W

Top Control Panel [P]

Various

0345	4822 267 10748	3P MALE
1701	4822 276 13775	SWITCH
1702	4822 276 13775	SWITCH
1703	4822 276 13775	SWITCH
1704	4822 276 13775	SWITCH
1705	4822 276 13775	SWITCH

3701	4822 051 20391	390Ω 5% 0.1W
3702	4822 117 13528	200Ω 1% 0.125W
3703	4822 117 10845	620Ω 1% 0.1W
3704	4822 117 11534	1k1 1% 0.1W
3705	4822 117 11951	2k 1% 0.1W
3999	4822 051 10102	1k 2% 0.25W

A LSP (Large Signal Panel)

Error	Device	Description	Defective item	Diagram	Defect. module indication
1	29"	NVM	7011	B5	Control
2	1N	HFB			Horizontal Flyback
3	560N	PICNIC	7709	B3	Feature Box
4	-	5V2			+5V Supply
5	10N	8V6			+8V Supply
6	22N				Slow I²C blocked
7	6N8	HOP video control/geometry	7301	B4	Video Controller
8	560N	HIP I/O-video processing	7323	B2	Chroma IF IO
9	-			A3	
10	1N				
11	3W 15R				
12	100R	TUNER_PROT			+8V (Tuner) Supply
13	6K8	Tuner	U1200	A7	Tuner
14	-	ITT sound processor + Dolby	7651	B6	Audio Module
15	22K				
16	FUSE 8R2	FBX_PROT			

Error Code Table

Error messages

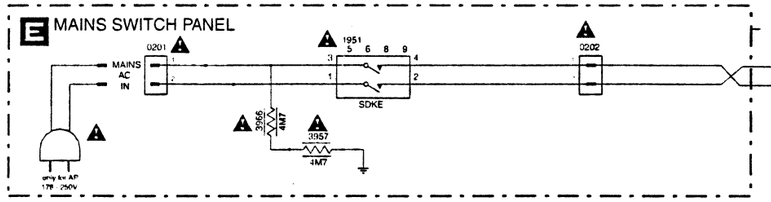

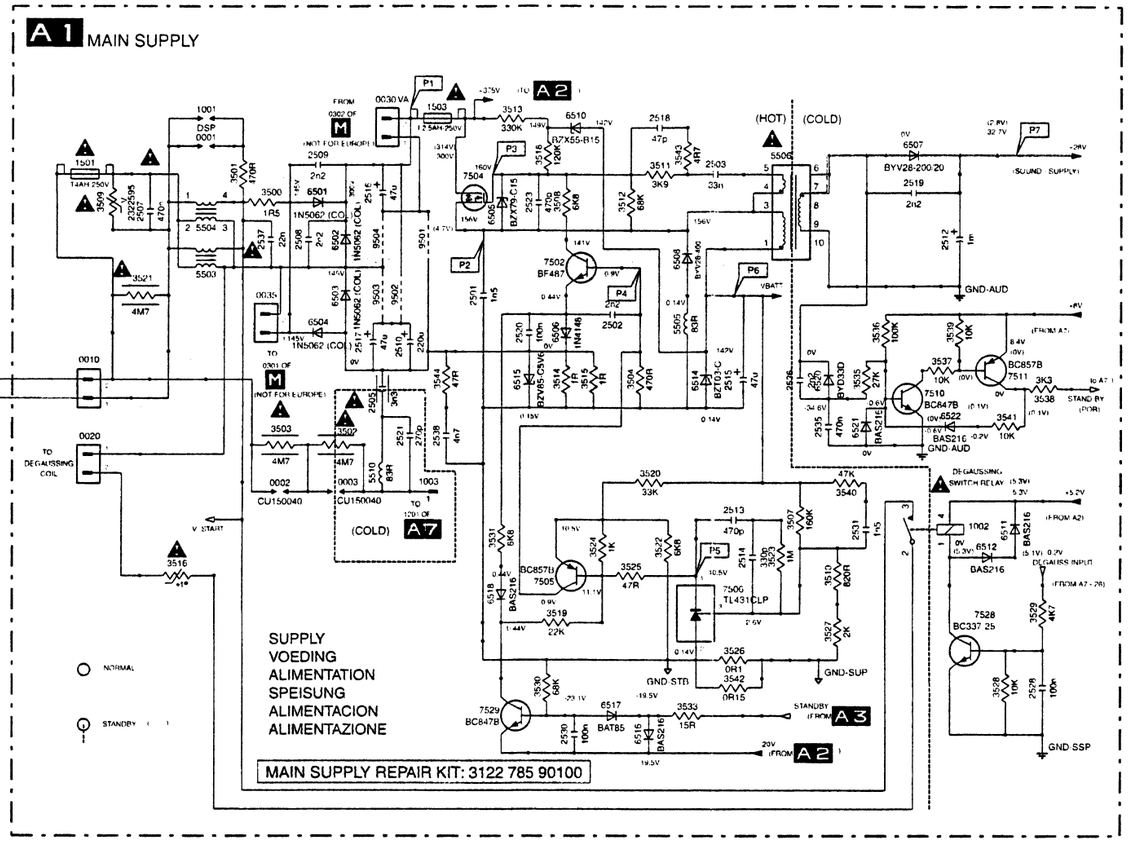

Diversity Tables

Diversity Large Signal Panel (A1)					
PosNr	29"	25"	28"	28" WS	32" WS
8000	CBLE DIP 2P/340mm	CBLE HR 3P/340mm	CBLE HR 3P/340mm	CBLE DIP 2P/340mm	CBLE DIP 2P/340mm

Diversity Large Signal Panel (A3)					
PosNr	29"	25"	28"	28" WS	32" WS
2420	1N	1N	1N	560P	1N
2421	560N	560N	470N	-	-
2422	-	-	-	21U2	21U2
2425	10N	9N1	-	11N	11N
2426	22N	24N	24N	24N	24N
2431	6N8	3N3	3N3	3N3	3N3
2433	560N	390N	470N	390N	430N
2435	-	-	9N1	-	-
2455	1N	-	-	3N3	3N3
3415	3W 15R	3W 15R	3W 15R	PR03 12R	PR03 12R
3431	100R	220R	220R	220R	220R
3450	6K8	-	-	10K	10K
3450	-	8K2	8K2	-	-
3451	22K	22K	22K	10K	10K
3466	FUSE 6R2	6R8	FUSE 8R2	1R	1R
3488	330K	220K	220K	220K	120K
5421	COI LINCOR DRUM	COI LINCOR DC12 8MH	COI LINCOR DRUM	COI LINCOR DRUM	COI LINCOR DRUM
5422	COI BRIDGE	-	-	COI BRIDGE	COI BRIDGE
5424	-	COI BRIDGE	COI BRIDGE	-	-
5430	LOT 30KV ISO ELDOR	LOT PWRSL. 27K5	LOT PWRSL. 27K5	LOT PWRSL. 30KV	LOT PWRSL. 30KV
2445	-	-	-	-	1U
2446	-	-	-	-	470P
2447	-	-	-	-	470P
3439	-	-	-	-	100R
3440	-	-	-	-	22K
3441	-	-	-	-	470K
3442	-	-	-	-	470K
3443	-	-	-	-	100R
3444	-	-	-	-	39K
3445	-	-	-	-	2K2
3446	-	-	-	-	2K2
3447	-	-	-	-	22R
4441	-	-	-	-	JUMP
6440	-	-	-	-	SMAS216
6441	-	-	-	-	SMAS216

Diversity Large Signal Panel (A4)					
PosNr	29"	25"	28"	28" WS	32" WS
0390	-	-	-	-	CON 03P
3602	3K3	3K3	3K3	-	-
3611	-	-	-	8K2	8K2
3614	1M	1M	1M	1M2	1M2
3615	470K	560K	560K	560K	560K
3621	1R	1R5	1R5	1R5	1R5
3622	1R	1R	1R	1R8	1R8
6600	1N4148	1N4148	1N4148	SIGAT85	SIGAT85
6621	ECYD33D	-	-	ECYD33D	ECYD33D
6622	DIO	-	-	DIO	DIO
7440	-	-	-	-	LM358N
7441	-	-	-	-	SIGC547B
7442	-	-	-	-	SIGC557B
9622	-	WR	WR	-	-

Diversity Small Signal Panel (B6)			
Item	100HZ INCR ST	DS VIRT DLB	100HZ DLB
2636	220N	-	-
2638	220N	-	-
2641	220N	-	-
2642	220N	-	-
2663	-	470P	470P
2664	-	470P	470P
2677	2U2	10U	10U
2676	-	10U	10U
2678	-	10U	10U
2685	-	1N	1N
2686	-	1N	1N
2692	100N	-	-
3552	4K7	-	-
3617	6K8	-	-
3636	1M	-	-
3638	1M	-	-
3642	1M	-	-
3644	1M	-	-
3657	330K	-	-
3659	330K	-	-
3661	1K2	-	-
3663	1K2	-	-
3665	2K7	-	-
3676	1K2	-	-
3677	330K	-	-
3678	1K2	-	-
3679	330K	-	-
4605	-	JUMP	JUMP
4606	-	JUMP	JUMP
4613	-	JUMP	JUMP
4615	-	JUMP	JUMP
4620	-	JUMP	JUMP
4621	-	JUMP	JUMP
4630	JUMP	-	-
4631	JUMP	-	-
4632	-	JUMP	JUMP
4633	-	JUMP	JUMP
4634	-	JUMP	JUMP
4635	-	JUMP	JUMP
4650	-	JUMP	JUMP
4651	-	JUMP	JUMP
4678	-	JUMP	JUMP
4679	-	JUMP	JUMP
4680	JUMP	-	-
4681	JUMP	-	-
7651	MSP3415D-FH-B3	MSP3451G-FH-A1	MSP3451G-FH-A1
7658	BC847BS	-	-
7663	BC847BS	-	-
7675	74HC4052PW	-	-
7681	BC847BW	-	-

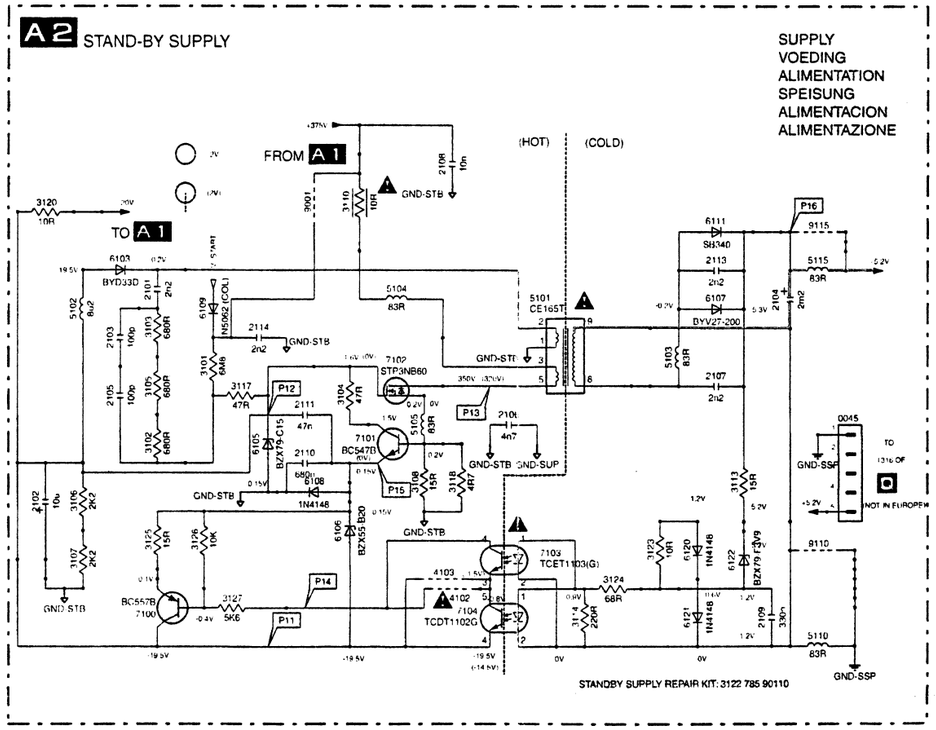

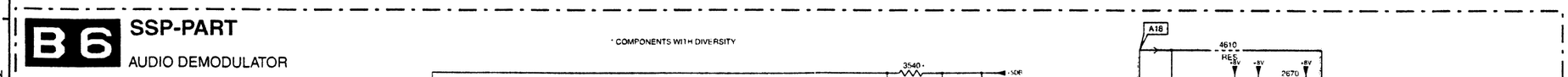

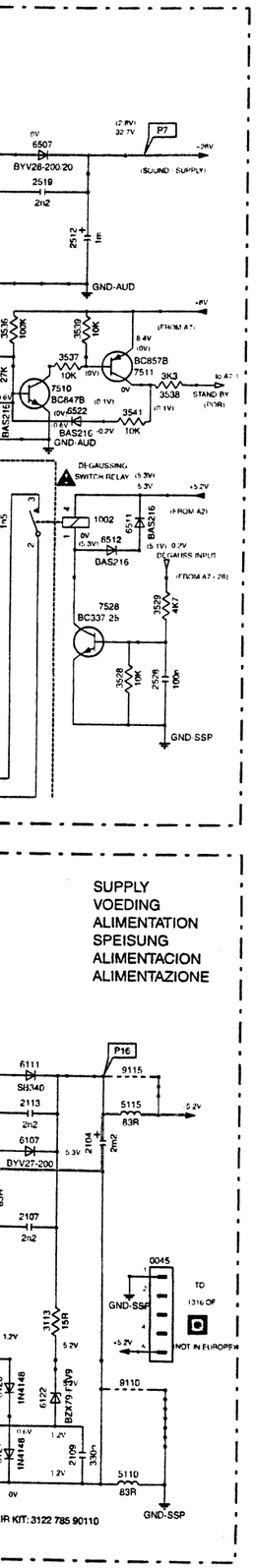

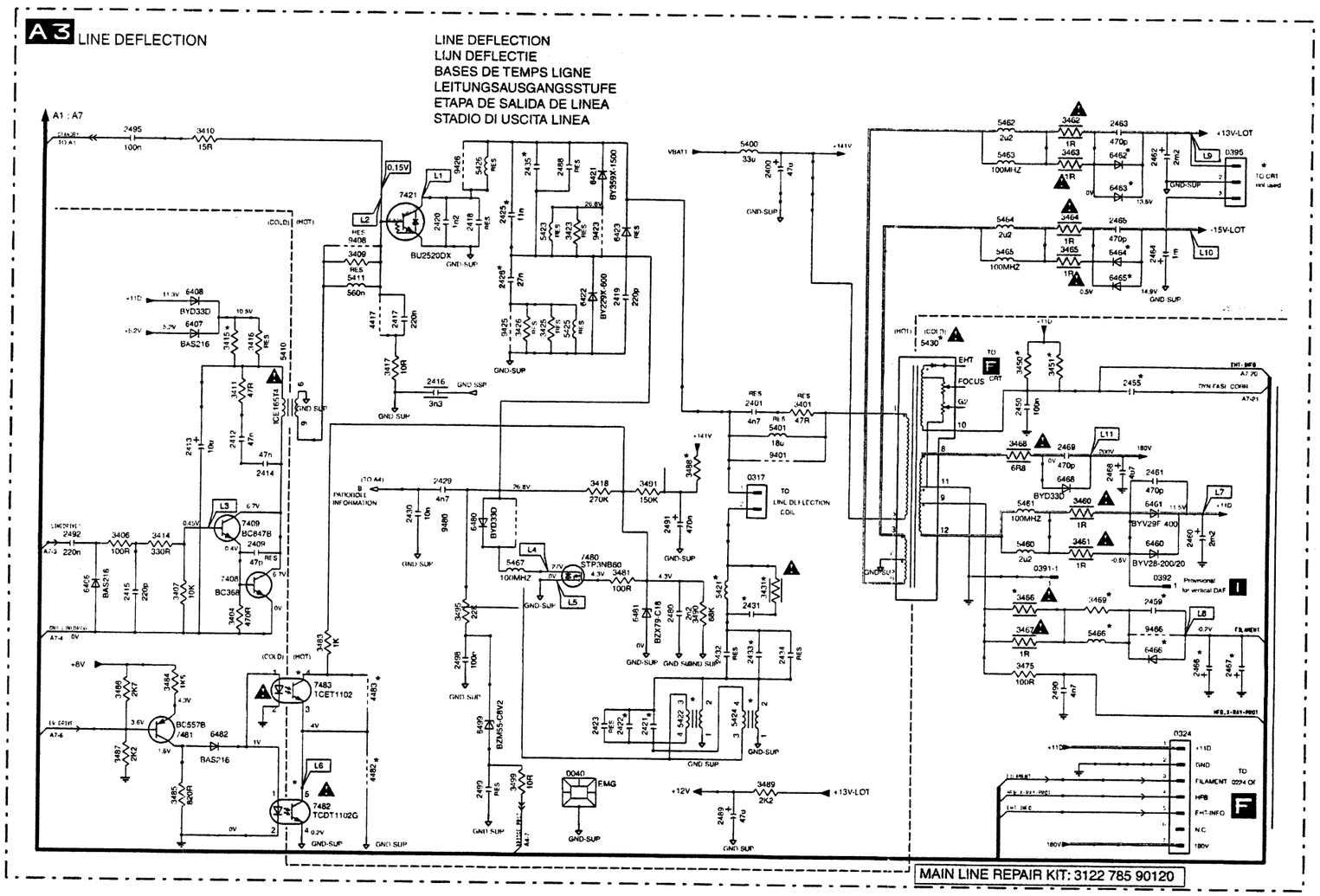

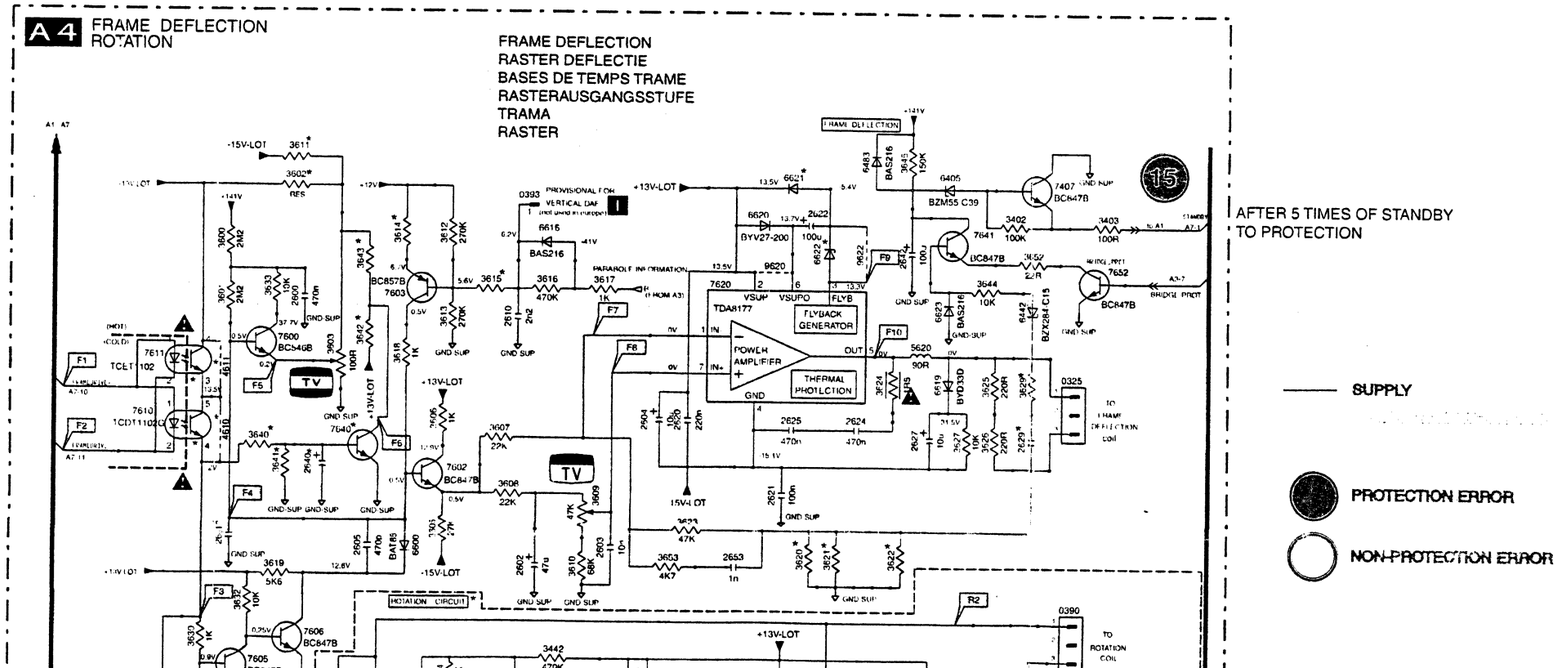

	0001	B3	3107	L13	3739	S20	7733	U26	
	0002	D13	3108	K16	3740	T20	7740	U28	
	0003	D14	3110	I15	3741	R20	7750	Q28	
	0010	C12	3113	K18	3742	R21	9001	I15	
A	0020	D12	3114	L17	3743	T21	9110	L19	
	0030	B14	3117	J14	3744	Q20	9401	E28	
	0035	C13	3120	I13	3745	S20	9408	C24	
	0045	K19	3118	K16	3752	Q26	9423	C26	
	0041	Q27	3125	L14	3753	R26	9425	D26	
	0201	D6	3126	L14	3754	R25	9501	B14	
	0202	D12	3123	L18	3756	T27	9502	C14	
	0325	L29	3124	L17	3757	R30	9503	C14	
	0393	J25	3127	L14	3758	R30	9504	B14	
B	0390	M29	3406	F22	3762	R31	9620	K27	
	0680	M1	3407	F23	3763	W30			
	0681	P1	3402	J29	3764	W30			
	0682	U7	3409	C24	3765	S29			
	0735	R32	3410	B23	3770	T25			
	0736	Q32	3403	J30	3773	T25			
	0737	U32	3411	D23	3781	W30			
	0738	V32	3414	F23	3784	U30			
	0739	S32	3426	D26	3790	Q27			
C	1001	B13	3431	F28	3794	V23			
	1003	D15	3440	O23	3795	W23			
	1002	E19	3439	N25	3792	R27			
	1501	B12	3441	N24	3789	Q31			
	1503	B15	3442	N25	3796	V27			
	1651	T9	3443	N25	3798	U27			
	2101	J14	3444	N25	3957	D8			
	2102	K13	3445	N27	3966	D7			
D	2103	J14	3446	O27	4102	L16			
	2105	J14	3447	N27	4103	L16			
	2104	J19	3450	D30	4417	D24			
	2106	K17	3451	D30	4482	H24			
	2108	I16	3460	E31	4483	G24			
	2107	J18	3461	F31	4605	W3			
	2110	K15	3468	E30	4606	T3			
	2111	K15	3469	F31	4604	W9			
	2109	L19	3475	G30	4607	U6			
E	2114	J15	3484	G23	4608	U6			
	2113	I18	3483	G24	4609	U6			
	2400	B28	3481	F27	4612	M5			
	2401	D28	3500	B13	4610	N12			
	2409	F23	3501	B13	4613	M13			
	2412	E23	3502	D14	4614	O12			
	2413	E23	3503	D13	4615	R13			
	2414	E24	3491	E27	4610	L23			
	2421	G27	3504	C16	4611	L23			
F	2422	G27	3495	F25	4620	U14			
	2423	G26	3509	B12	4621	W13			
	2425	C26	3508	B15	4634	T3			
	2426	C26	3507	E17	4630	T8			
	2429	E25	3499	H26	4635	T3			
	2443	O24	3511	B16	4631	T8			
	2444	N24	3510	E18	4632	R10			
	2445	N24	3512	B16	4633	S10			
G	2446	N26	3513	B15	4652	P1			
	2447	O26	3514	C15	4654	R2			
	2450	D30	3516	E13	4650	U13			
	2455	D31	3515	C16	4651	W13			
	2459	F31	3518	B15	4653	S14			
	2460	E32	3521	C12	4676	W12			
	2461	E31	3519	E15	4677	W12			
	2462	B31	3520	D16	4682	U7			
	2469	E31	3522	E16	4678	R12			
H	2502	S2	3523	E17	4683	U7			
	2503	R2	3524	E16	4679	R12			
	2501	O5	3525	E16	4684	U7			
	2504	W2	3532	N9	4685	W7			
	2480	F27	3533	N8	4680	R13			
	2505	T2	3526	F17	4686	W7			
	2506	Q2	3527	E18	4687	W7			
	2507	Q2	3530	F15	4681	R14			
	2488	B26	3531	E15	4707	R31			
I	2501	C15	3528	F19	4708	R31			
	2489	H28	3529	E19	4709	S32			
	2508	O9	3533	F16	4710	S32			
	2502	C16	3540	N9	4722	U25			
	2491	E27	3535	C18	4736	V24			
	2505	D14	3550	O3	4737	Q26			
	2507	B12	3551	P2	5102	J13			
	2503	B17	3536	C18	5101	J17			
J	2508	B13	3537	C18	5104	J16			
	2490	G31	3552	R3	5103	J18			
	2509	B14	3544	M12	5105	K16			
	2510	C14	3538	D19	5110	L19			
	2512	B18	3539	C18	5115	I19			
	2513	D17	3545	P12	5423	C26			
	2516	B14	3540	D18	5425	D26			
	2514	E17	3542	F17	5426	B25			
	2517	C14	3543	B16	5424	G28			
K	2515	C17	3544	C15	5430	D29			
	2518	B16	3546	O13	5460	F30			
	2520	C15	3541	D19	5467	F26			
	2521	D14	3547	Q13	5503	C13			
	2519	B18	3617	R2	5504	B13			
	2523	B15	3600	K23	5505	C16			
	2530	F16	3601	K23	5506	B17			
	2528	F19	3610	O14	5510	D14			
	2531	E18	3602	J23	5620	K28			
L	2537	B13	3611	Q14	5651	W9			
	2535	D17	3612	S13	5652	W9			
	2536	C17	3613	S13	5653	O9			
	2538	D15	3603	K24	5654	U9			
	2550	O3	3614	U14	6103	I14			
	2551	P2	3615	W14	6105	K15			
	2546	S13	3624	M5	6106	K15			
	2547	S13	3605	M25	6108	K15			
	2548	T14	3616	T14	6109	J14			
M	2549	W14	3625	M5	6107	J18			
	2609	O9	3606	L25	6111	I18			
	2610	W10	3607	L25	6120	L18			
	2611	W10	3608	L25	6121	L18			
	2600	K23	3621	N12	6122	L18			
	2601	M23	3611	J23	6406	F22			
	2602	M25	3609	M26	6407	D23			

5338

NON-PROTECTION ERROR

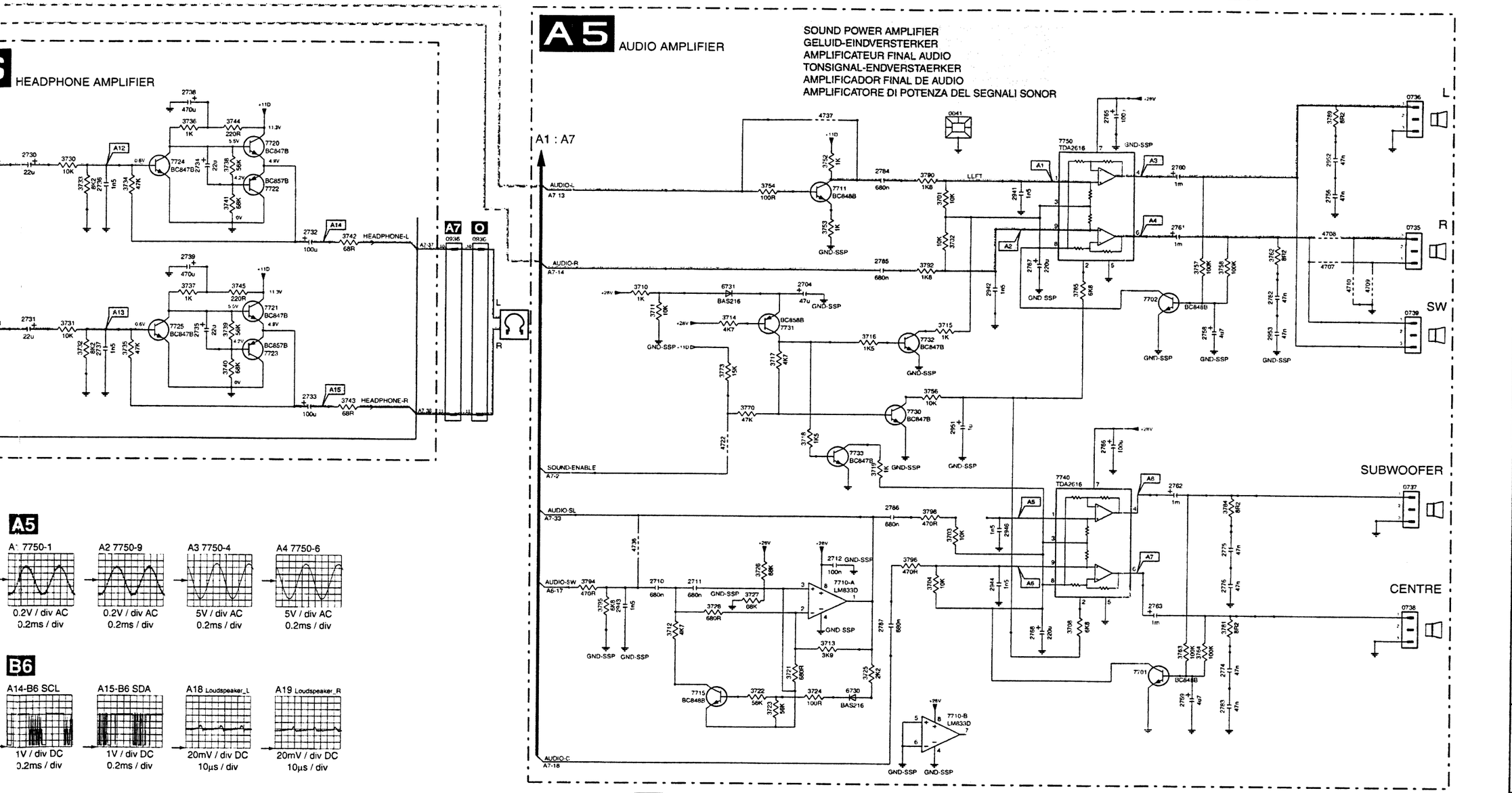

3122 785 00240

CHASSIS EM2E

CL 96532156_091.eps
140400

	2547	S13	3605	M25	6106 K15
	2548	T14	3616	T14	6109 J14
M	2549	W14	3625	M5	6107 J18
	2609	O9	3606	L25	6111 I18
	2610	W10	3607	L25	6120 L18
	2611	W10	3608	L25	6121 L18
	2600	K23	3621	N12	6122 L18
	2601	M23	3611	J23	6406 F22
	2602	M25	3609	M26	6407 D23
	2603	M26	3630	M5	6408 C23
N	2605	M24	3610	M26	6405 J28
	2604	L26	3612	K25	6421 B26
	2610	K25	3613	K25	6422 C26
	2632	M5	3614	K24	6440 N25
	2629	N11	3634	O5	6441 O25
	2634	M6	3615	K25	6442 K29
	2620	L26	3616	K25	6465 C31
	2621	M27	3618	K24	6466 G31
	2637	P11	3619	M23	6468 E31
O	2639	M9	3617	K26	6480 E25
	2622	J27	3620	M27	6482 G23
	2636	O13	3621	M28	6481 F27
	2640	M9	3623	M26	6483 J28
	2638	P13	3636	O13	6501 B14
	2624	L28	3637	O12	6502 B14
	2625	L27	3622	M28	6503 C14
	2641	T13	3638	P13	6504 C14
	2651	O3	3624	L28	6505 B15
P	2627	L28	3651	U1	6506 C15
	2642	W13	3630	N23	6508 C16
	2653	P3	3652	T1	6507 B18
	2652	Q5	3625	L29	6510 B16
	2654	P3	3631	N23	6511 E19
	2629	L29	3653	S1	6515 C15
	2655	T4	3626	L29	6512 E19
	2656	T4	3632	M23	6514 C17
Q	2659	Q2	3642	T13	6516 F16
	2657	T5	3654	U1	6517 F16
	2660	R2	3627	L29	6518 E15
	2658	T5	3633	K23	6520 C17
	2661	U2	3643	U13	6521 D18
	2640	L24	3644	U13	6522 D18
	2662	S2	3655	M2	6600 M24
	2663	U2	3629	L29	6616 K25
	2664	T2	3645	W13	6619 L28
R	2642	K28	3656	M2	6620 J27
	2665	W9	3650	W9	6621 J27
	2666	W10	3640	L23	6622 K27
	2667	T9	3641	L23	6623 K28
	2668	T9	3642	K24	6651 P3
	2653	M27	3643	K24	6652 O9
	2670	N12	3665	R2	6653 O9
	2669	P14	3657	O13	6654 N9
	2673	M11	3658	O12	6730 X26
S	2674	P11	3659	P13	6731 S25
	2677	O9	3660	N12	7100 L14
	2681	P5	3644	K29	7101 K16
	2678	O9	3645	J28	7102 J16
	2682	P5	3661	O13	7103 L17
	2675	O14	3662	P12	7104 L16
	2679	Q11	3663	Q13	7440-K N28
	2680	Q11	3653	M26	7440-J N26
	2692	S3	3652	K29	7407 J29
T	2685	R11	3673	S12	7441 N27
	2686	R11	3684	S1	7442 O27
	2690	N9	3685	R1	7482 H24
	2691	M9	3686	S1	7483 G24
	2693	U9	3687	R1	7502 C16
	2704	S25	3688	W1	7504 B15
	2710	V24	3676	U14	7505 E15
	2711	V24	3677	T13	7506 E17
	2712	V26	3689	T1	7510 D18
U	2730	Q18	3678	W13	7511 C19
	2731	S18	3690	W1	7529 F15
	2732	R21	3679	U13	7528 E19
	2733	T21	3680	M12	7600 K23
	2734	R20	3691	T1	7602 L25
	2735	S20	3692	Q1	7603 K24
	2736	R19	3693	Q1	7605 N23
	2737	T19	3694	Q1	7606 N24
V	2738	Q19	3695	R1	7610 L22
	2739	S19	3683	S14	7611 L22
	2756	R31	3696	Q10	7652-A S12
	2758	S30	3697	R10	7652-B U12
	2759	X30	3701	R27	7656-A M12
	2760	Q30	3702	R27	7656-B P12
	2761	R30	3703	V27	7658-A U13
	2762	U30	3704	V27	7658-B W13
W	2763	V29	3710	S24	7620 K27
	2765	Q29	3711	S24	7663-A O13
	2766	U29	3712	W24	7663-B P13
	2767	R28	3708	W29	7651 P6
	2768	W28	3713	W26	7640 L24
	2774	W30	3714	S25	7661 M5
	2775	V30	3715	S27	7641 K29
	2776	V30	3716	S26	7675-A S4
	2784	Q26	3717	T25	7675-B T4
	2785	R26	3718	U25	7652 K30
X	2786	U26	3719	U26	7710-R X27
	2782	S31	3721	W25	7674 M9
	2783	X30	3722	X25	7710-Q V26
	2787	W26	3723	X25	7681 R3
	2943	W23	3730	R18	7680 S13
	2941	R28	3731	S18	7701 W29
	2942	S28	3724	X26	7702 S29
	2944	V28	3732	T18	7711 R26
Y	2946	V28	3725	W26	7715 X24
	2951	T27	3726	V25	7720 Q20
	2952	Q31	3733	R18	7721 S20
	2953	S31	3727	V25	7722 R20
	3101	J14	3728	W24	7724 R19
	3102	K14	3734	R19	7723 T20
	3103	J14	3735	T19	7725 S19
	3104	J15	3736	Q19	7731 S25
	3105	J14	3737	S19	7730 T27
Z	3106	K13	3738	R20	7732 S27

9622		WR	WR		

B6 SSP-PART

AUDIO DEMODULATOR

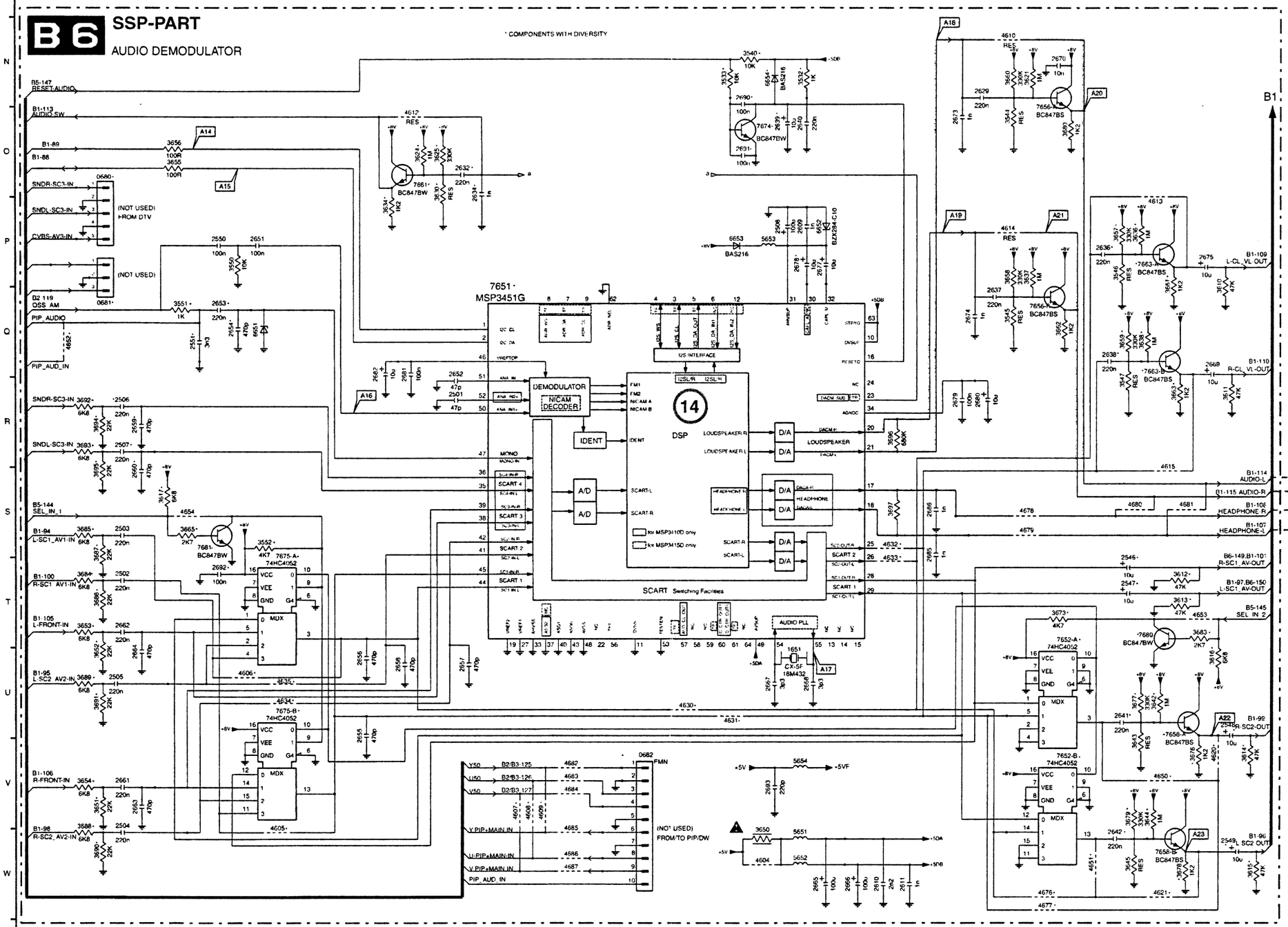

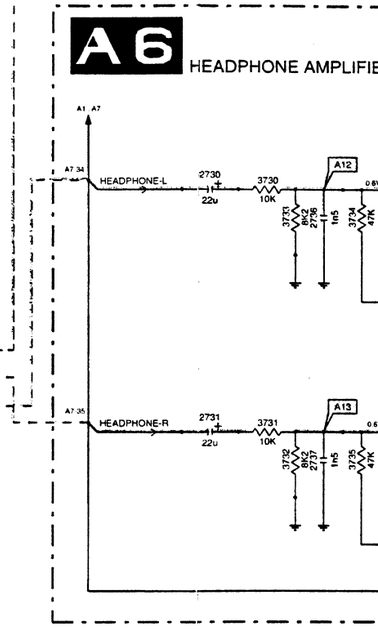

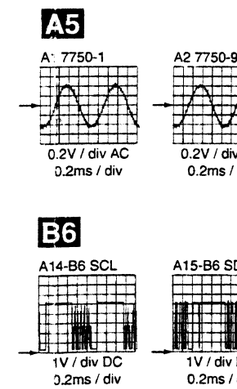

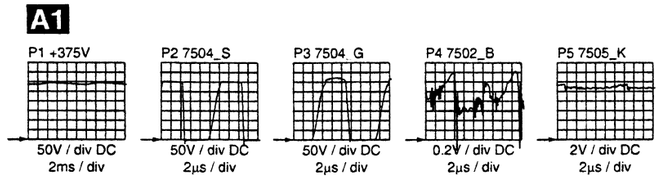

P6 VBATT=140Vdc

P7 Sound Supply =33Vdc

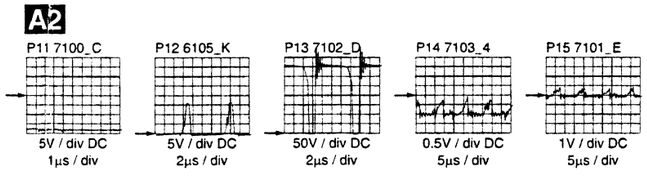

P16 5.2V

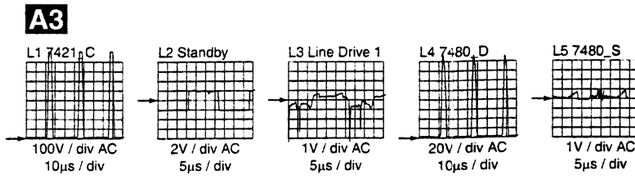

B SSP (Small Signal Panel) FOR DIAGRAM B5 SEE OTHER SIDE

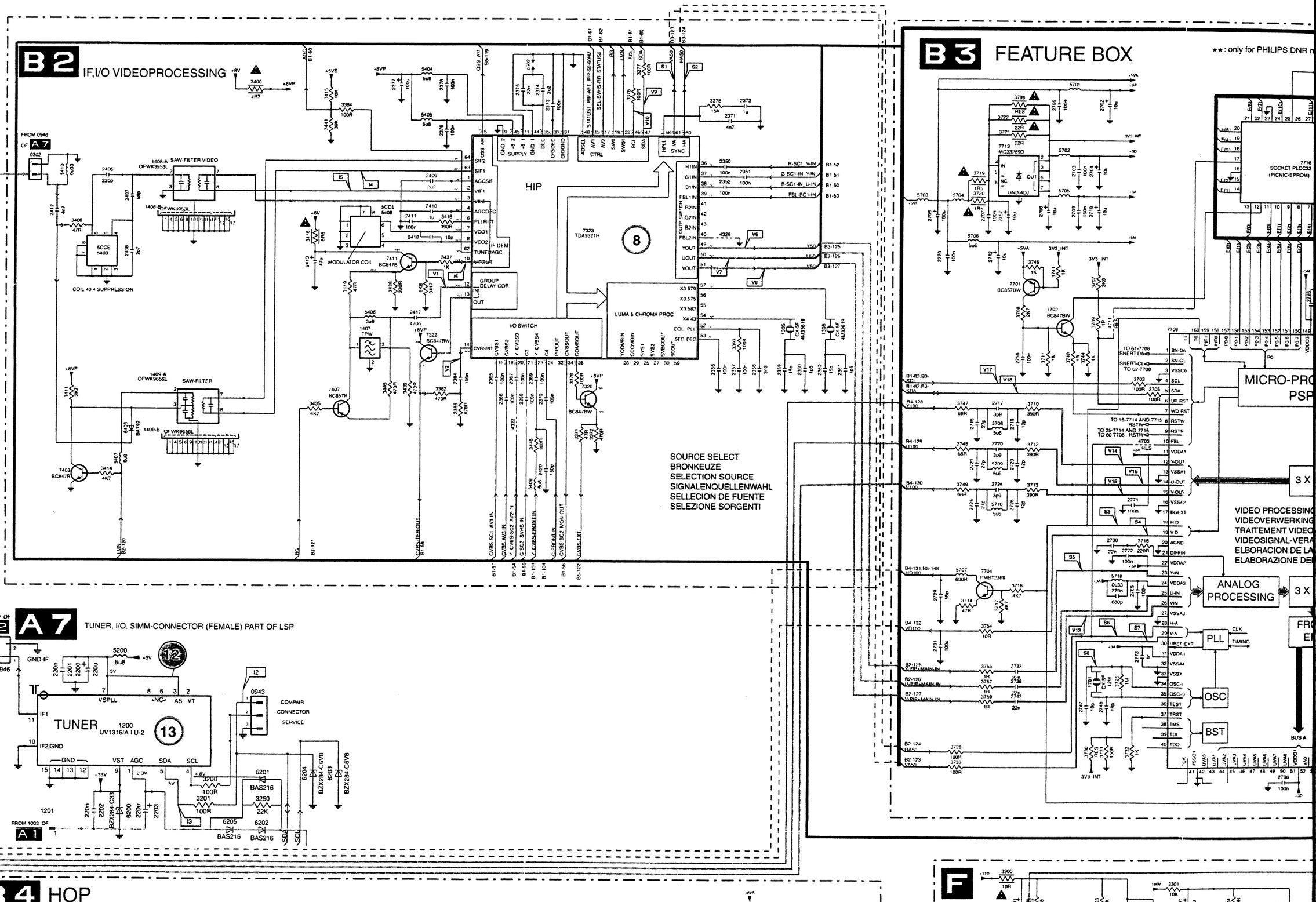

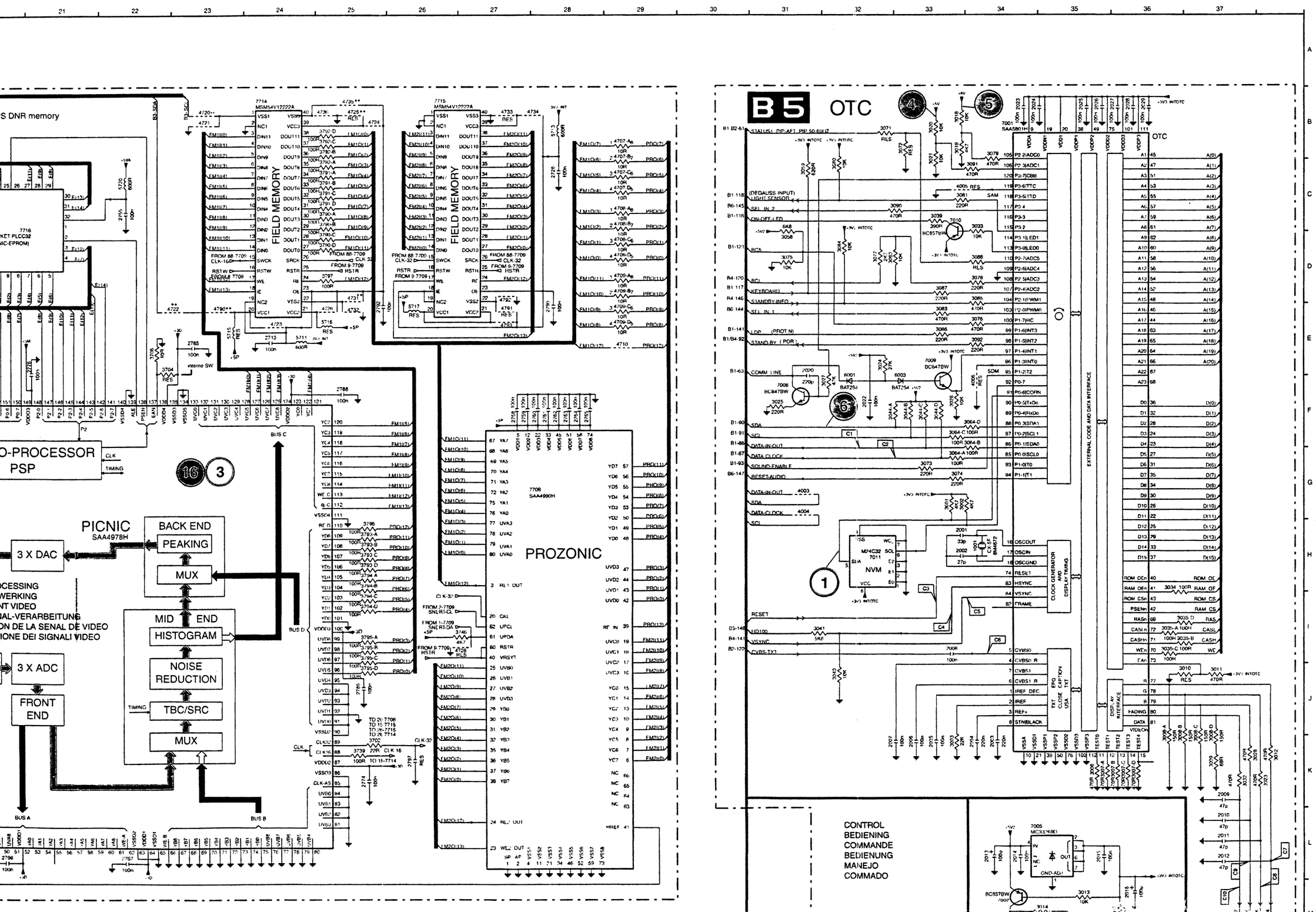

	c001	T11	3001	G34	3706	E22
	c002	B9	3002	G34	3707	E18
	0031	R20	3003	K34	3708	F16
	0224	R16	3006	K36	3709	F18
A	0235	N21	3007-A	K36	3710	G17
	0298-A	R23	3007-B	K37	3711	F17
	0298-B	R23	3007-C	K37	3712	G17
	0298-C	P21	3007-D	K37	3713	H17
	0298-D	P21	3008-A	J37	3714	J16
	0298-E	P21	3008-B	J37	3716	I16
	0298-F	Q21	3008-C	J37	3717	J16
	0298-G	Q21	3008-D	J37	3718	I18
B	0298-H	R21	3009	K37	3719	D16
	0298-I	R24	3010	J37	3720	D16
	0298-K	R24	3011	J37	3721	C16
	0302	C1	3012	K37	3722	C16
	0334	S25	3013	M35	3725	K18
	0340	O16	3014	M35	3728	L16
	0383	Q21	3015	M34	3730	L17
	1001	H35	3016	M35	3731	L18
	1301	T5	3017	M36	3732	L18
C	1305	F12	3018	B34	3733	L16
	1308	F13	3019	B34	3739	K25
	1407	F6	3020	B34	3740	F17
	1408-A	C3	3021	B34	3741	E17
	1408-B	D3	3023	K37	3744	F17
	1409-A	F3	3024	E33	3745	E17
	1409-B	G3	3025	F32	3746	I27
	1701	K18	3026	F34	3747	G16
D	2001	H34	3027	F33	3748	G16
	2002	H34	3028	K37	3749	H16
	2003	K35	3029	R34	3754	J16
	2004	K35	3030	R34	3755	K16
	2005	K34	3031	O34	3757	K16
	2006	K34	3032	K35	3759	K16
	2007	K33	3033	C35	3790-A	C25
	2008	I34	3034	H37	3790-B	C25
	2009	K37	3035-A	I37	3790-C	D25
	2010	K37	3035-B	I37	3790-D	D25
E	2011	K37	3035-C	I37	3791-A	C25
	2012	K37	3035-D	I38	3791-B	C25
	2013	L34	3039	C34	3791-C	C25
	2014	L34	3040	J33	3791-D	C25
	2015	L35	3041	I32	3792-A	C25
	2016	M36	3044-A	F33	3792-B	B25
	2017	M34	3044-B	F34	3792-C	B25
	2019	S36	3044-C	F34	3792-D	B25
F	2020	E32	3044-D	F34	3793-A	H25
	2022	F33	3058	D32	3793-B	H25
	2023	B35	3059	C32	3793-C	H25
	2024	B35	3060	D33	3793-D	H25
	2025	B36	3061	R34	3794-A	H25
	2026	B36	3062	N36	3794-B	H25
	2027	B37	3064-A	G34	3794-C	I25
	2028	B37	3064-B	F35	3794-D	I25
	2029	B37	3064-C	F34	3795-A	I25
G	2031	N35	3064-D	F35	3795-B	I25
	2032	S35	3071	B33	3795-C	I25
	2033	U32	3072	B34	3795-D	J25
	2034	U33	3073	G34	3796	H25
	2035	U33	3074	G34	3797	D25
	2036	U33	3075	D32	3798	C16
	2037	U33	3076	E35	4002	E39
	2038	R35	3077	D33	4003	G32
H	2300	V11	3078	D35	4004	G32
	2300	N19	3079	B35	4005	C34
	2301	N16	3080	C33	4006	F35
	2302	N17	3081	C34	4301	P4
	2303	R9	3083	E34	4306	T4
	2303	N19	3084	D33	4310	R11
	2304	T8	3085	D35	4311	S13
	2304	N19	3086	E34	4322	G8
	2305	T8	2087	D34	4326	E11
I	2305	O17	3088	D35	4703	G18
	2306	U10	3090	C34	4707-A	B29
	2306	O17	3091	C35	4707-B	B29
	2307	R4	3092	E35	4707-C	C29
	2307	O19	3300	U11	4707-D	C29
	2308	S9	3300	N16	4708-A	C29
	2308	P17	3301	N12	4708-B	C29
	2309	Q4	3301	N19	4708-C	D29
	2309	P19	3302	N17	4708-D	D29
J	2310	Q4	2303	N18	4709-A	D29
	2310	P17	3304	U12	4709-B	D29
	2311	U6	3304	N20	4709-C	E29
	2312	Q17	3305	N17	4709-D	E29
	2313	S9	3306	R9	4710	E29
	2313	R17	3306	N18	4711	F18
	2314	R3	3307	R10	4720	B23
	2315	R3	3307	O17	4721	B23
K	2315	O16	3308	R10	4722	E23
	2316	R17	3308	O20	4723	E24
	2317	R4	3309	R12	4724	B25
	2317	S24	3309	O19	4725	B25
	2318	R4	3310	Q9	4726	E25
	2318	R22	3310	O21	4728	I27
	2319	T3	3311	T8	4731	D25
	2320	U4	3311	O17	4732	E25
	2320	R18	3312	T8	4733	B27
	2321	P4	3312	O18	4734	B28
L	2321	Q17	3313	U9	4735	B25
	2322	P4	3313	O18	4736	B25
	2322	R17	3314	T8	4790	E23
	2323	O4	3314	O18	4791	E27
	2323	R17	3315	S9	4792	D27
	2324	T7	3315	O17	4793	E27
	2324	S24	3316	U10	5300	O20
	2325	T3	3316	P20	5301	R5

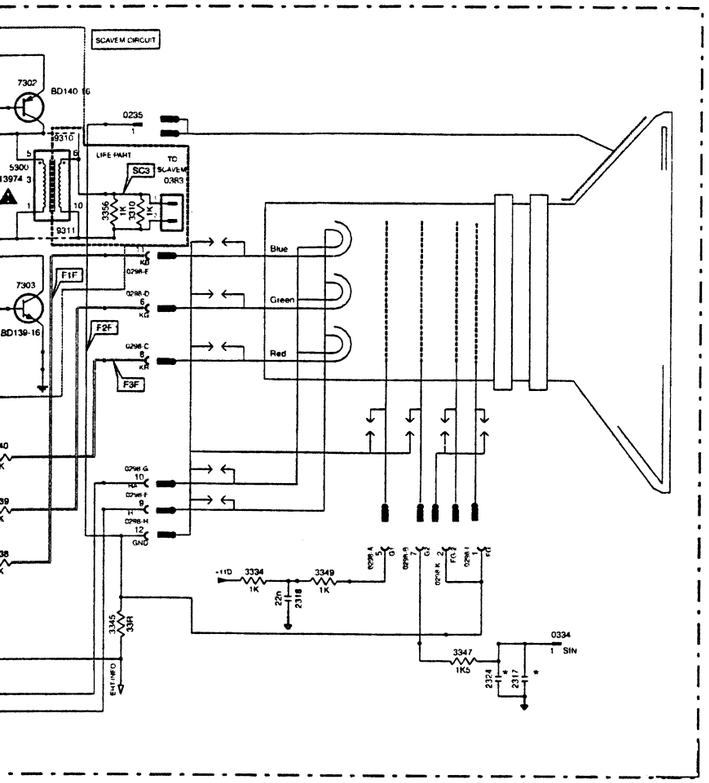

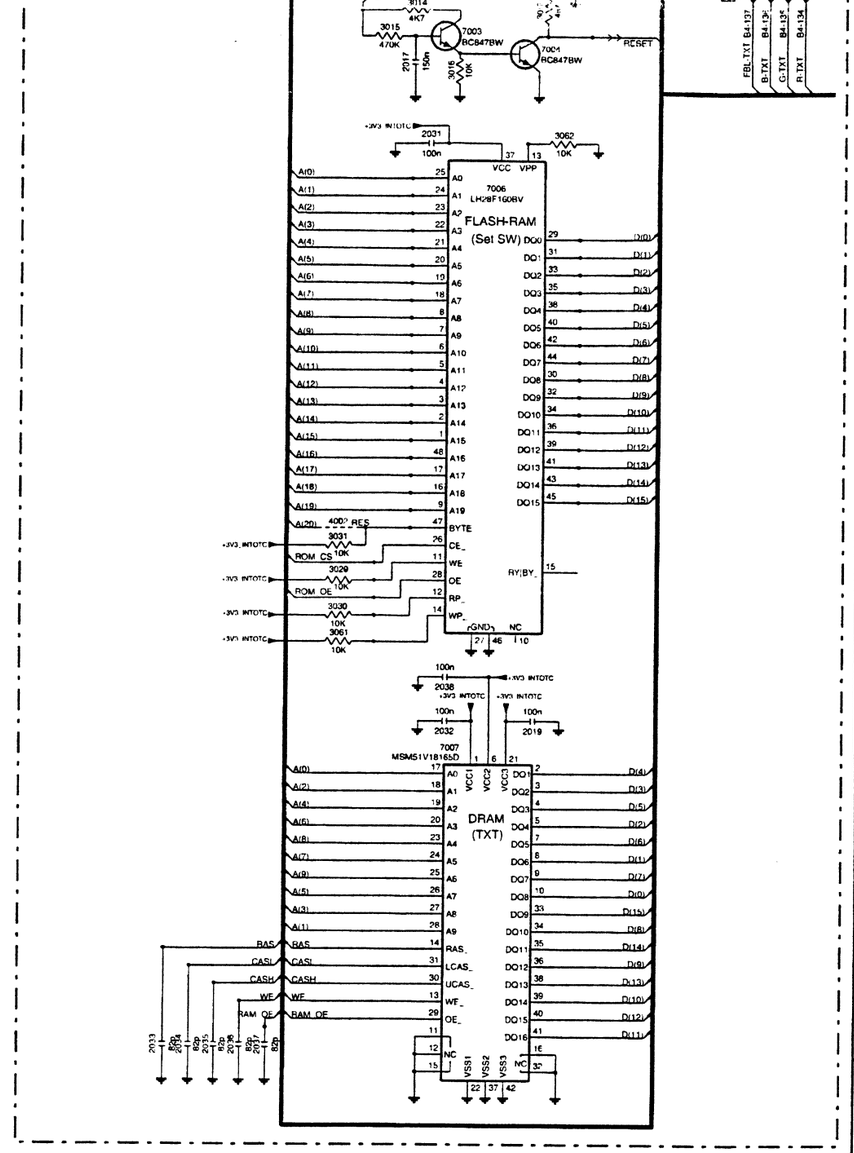

Diversity Tables

Diversity CRT-Panel (F)					
PosNr	29"	25"	28"	28" WS	32" WS
0298	-	-	-	-	SOC 9P
0298	CON 8P	CON 8P	CON 8P	CON 8P	-
0383	CON 02P	-	-	CON 02P	CON 02P
2300	22U	-	-	22U	22U
2301	220U	-	-	220U	220U
2302	3P3	-	-	3P3	3P3
2303	470P	-	-	470P	470P
2304	22N	-	-	22N	22N
2305	47U	-	-	47U	47U
2306	100N	-	-	100N	100N
2307	22N	-	-	22N	22N
2308	15P	-	-	15P	15P
2309	22N	-	-	22N	22N
2310	18P	-	-	18P	18P
2312	22P	-	-	22P	22P
2317	4N7	4N7	4N7	4N7	-
2317	4N7	4N7	4N7	4N7	-
2321	-	68P	68P	-	-
2322	-	82P	82P	-	-
2323	-	56P	56P	-	-
2324	-	-	-	-	820P
2325	100N	-	-	100N	100N
3300	FUSE 10R	-	-	FUSE 10R	FUSE 10R
3301	3W 10K	-	-	3W 10K	3W 10K
3302	1K8	-	-	1K8	1K8
3303	18K	-	-	18K	18K
3304	820R	-	-	820R	820R
3305	330R	-	-	330R	330R
3306	4R7	-	-	4R7	4R7
3307	10R	-	-	10R	10R
3308	56K	-	-	56K	56K
3309	150R	-	-	150R	150R
3310	1K	-	-	1K	1K
3311	100R	-	-	100R	100R
3312	2K2	-	-	2K2	2K2
3313	220R	-	-	220R	220R
3314	220R	-	-	220R	220R
3315	1K5	-	-	1K5	1K5
3316	56K	-	-	56K	56K
3317	1K2	-	-	1K2	1K2
3318	15R	-	-	15R	15R
3319	820R	-	-	820R	820R
3320	1K	-	-	1K	1K
3335	100R	-	-	100R	100R
3335	-	1K	1K	-	-
3336	100R	-	-	100R	100R
3336	-	1K	1K	-	-
3337	100R	-	-	100R	100R
3337	-	1K	1K	-	-
3355	4R7	-	-	4R7	4R7
3356	1K	-	-	1K	1K
3357	4R7	-	-	4R7	4R7
5300	TFM	-	-	TFM	TFM
7300	SIGF199	-	-	SIGF199	SIGF199
7301	SIGF370	-	-	SIGF370	SIGF370
7302	TRA POW	-	-	TRA POW	TRA POW
7303	TRA POW	-	-	TRA POW	TRA POW
9305	WR	-	-	WR	WR
9308	WR	-	-	WR	WR
9309	WR	-	-	WR	WR
9312	WR	-	-	WR	WR
9313	WR	-	-	WR	WR
9424	-	-	-	-	WR

Diversity Small Signal Panel (B3)			
Item	100HZ INCR ST	DS VIRT DLB	100HZ DLB
2728	-	100N	-
2758	-	100N	-
2759	-	100N	-
2760	-	100N	-
2761	-	100N	-
2762	-	100N	-
2763	-	100N	-
2764	-	100N	-
2765	-	100N	-
2790	-	100N	-
3793	10R	100R	10R
3794	10R	100R	10R
3795	10R	100R	10R
3796	10R	100R	10R
4707	10R	-	10R
4708	10R	-	10R
4709	10R	-	10R
4710	JUMP	-	JUMP
4734	-	JUMP	-
4792	-	JUMP	-
4793	-	JUMP	-
5713	-	FXDIND	-
7708	-	SAA4990H	-
7715	-	MSM54V12222A-30JS	-

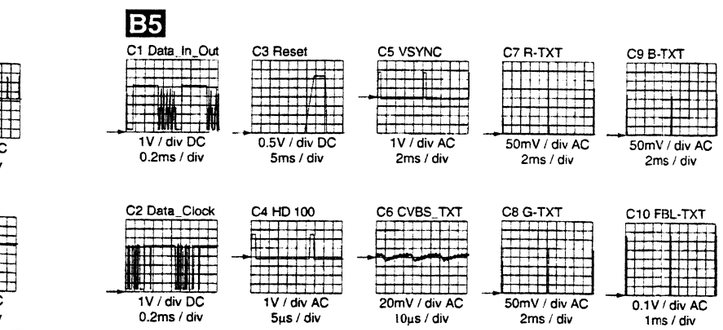

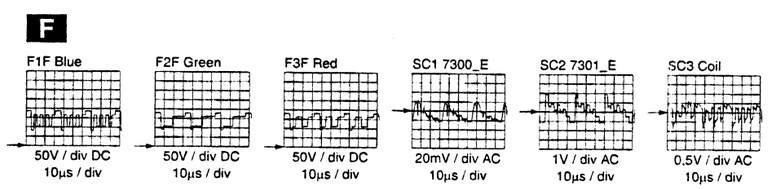

IF, CVAS, RGB

PROTECTION ERROR

NON-PROTECTION ERROR

M	2325	N18	3317	S10	5302
	2328	O8	3317	P17	5403
	2329	O7	3318	S9	5404
	2330	O7	3318	P19	5405
	2331	O7	3319	S5	5406
	2332	R3	3319	P20	5407
	2333	O11	3320	Q3	5408
	2334	O9	3320	P17	5409
N	2335	T7	3321	Q3	5410
	2336	O9	3322	Q13	5701
	2338	S3	3322	O16	5702
	2339	R11	3323	U6	5703
	2340	V12	3324	U5	5704
	2341	R2	3325	T6	5705
	2350	D11	3326	T6	5706
	2351	D12	3327	T6	5707
	2352	D11	3328	R9	5708
O	2356	F11	3329	R2	5709
	2357	F11	3330	T3	5710
	2358	F12	3331	U4	5711
	2359	F12	3332	T3	5713
	2360	F12	3333	U4	5715
	2361	F13	3334	U5	5716
	2362	F13	3334	R22	5717
	2365	G8	3335	T7	5718
P	2366	G8	3335	Q17	5720
	2367	G8	3336	S6	6001
	2368	G8	3336	R17	6003
	2369	G9	3337	T6	6301
	2370	G9	3337	Q17	6302
	2371	C11	3338	T7	6303
	2372	C12	3338	R20	6304
	2373	C9	3339	Q20	6305
	2374	B9	3340	O10	6305
Q	2375	B8	3340	Q20	6306
	2376	C7	3341	O10	6306
	2377	B7	3341	R17	6307
	2378	B7	3342	P10	6307
	2384	G8	3342	Q17	6309
	2395	P4	3343	P12	6310
	2396	P3	3343	R16	6310
	2397	P4	3344	Q11	6311
	2398	S6	3345	P9	6315
R	2406	D3	3345	R21	6317
	2407	D3	3346	P9	6318
	2408	E3	3347	P9	6319
	2409	D7	3347	S24	6320
	2410	D7	3348	P10	6321
	2411	D7	3348	R16	6334
	2412	D2	3349	P11	6403
	2413	E5	3349	R23	7001
S	2417	F7	3350	P11	7002
	2418	E7	3350	Q19	7003
	2420	H9	3351	Q19	7004
	2702	C18	3352	R19	7005
	2703	D17	3354	R19	7006
	2704	D15	3355	N20	7007
	2706	D15	3356	O21	7008
	2707	D16	3357	P20	7009
	2708	D17	3362	S3	7010
T	2709	D17	3363	S4	7011
	2710	D18	3364	S3	7300
	2712	E16	3365	S2	7301
	2713	E24	3366	S10	7301
	2717	G16	3367	R10	7302
	2718	G16	3368	R10	7303
	2719	G16	3369	S10	7303
	2720	G16	3370	G9	7306
	2721	H16	3371	G9	7307
U	2723	H16	3372	G9	7308
	2724	H16	3376	C10	7309
	2725	H16	3377	B10	7310
	2726	H16	3378	C11	7311
	2728	C28	3382	G7	7312
	2729	J15	3384	C6	7320
	2730	I18	3385	G8	7322
	2731	J15	3386	S12	7323
V	2733	K16	3387	S13	7324
	2738	K16	3388	Q11	7330
	2743	K16	3389	Q10	7340
	2747	K17	3390	Q10	7403
	2748	K18	3391	S12	7407
	2755	C22	3392	R11	7411
	2756	F16	3393	F11	7701
	2757	D16	3394	Q9	7702
	2758	F27	3395	P4	7704
W	2759	F27	3396	P3	7708
	2760	F28	3397	P3	7709
	2761	F28	3398	P3	7713
	2762	F28	3399	O13	7714
	2763	F28	3400	B5	7715
	2764	F28	3406	D2	7716
	2765	F28	3411	G2	9310
	2766	J18	3414	H3	9311
	2767	L22	3415	C6	
X	2770	E15	3416	E5	
	2771	H18	3417	E7	
	2772	I18	3418	D7	
	2773	J18	3419	E6	
	2774	K25	3435	G6	
	2776	E21	3436	E7	
	2785	E23	3437	E7	
	2786	J25	3439	G7	
	2788	F25	3441	C6	
	2790	E28	3445	G7	
	2792	E25	3446	G9	
	2795	C17	3702	K25	
	2796	L20	3703	G18	
	2797	K26	3704	E22	
	2798	J18	3705	G18	

CL 96532156_092.eps
140400

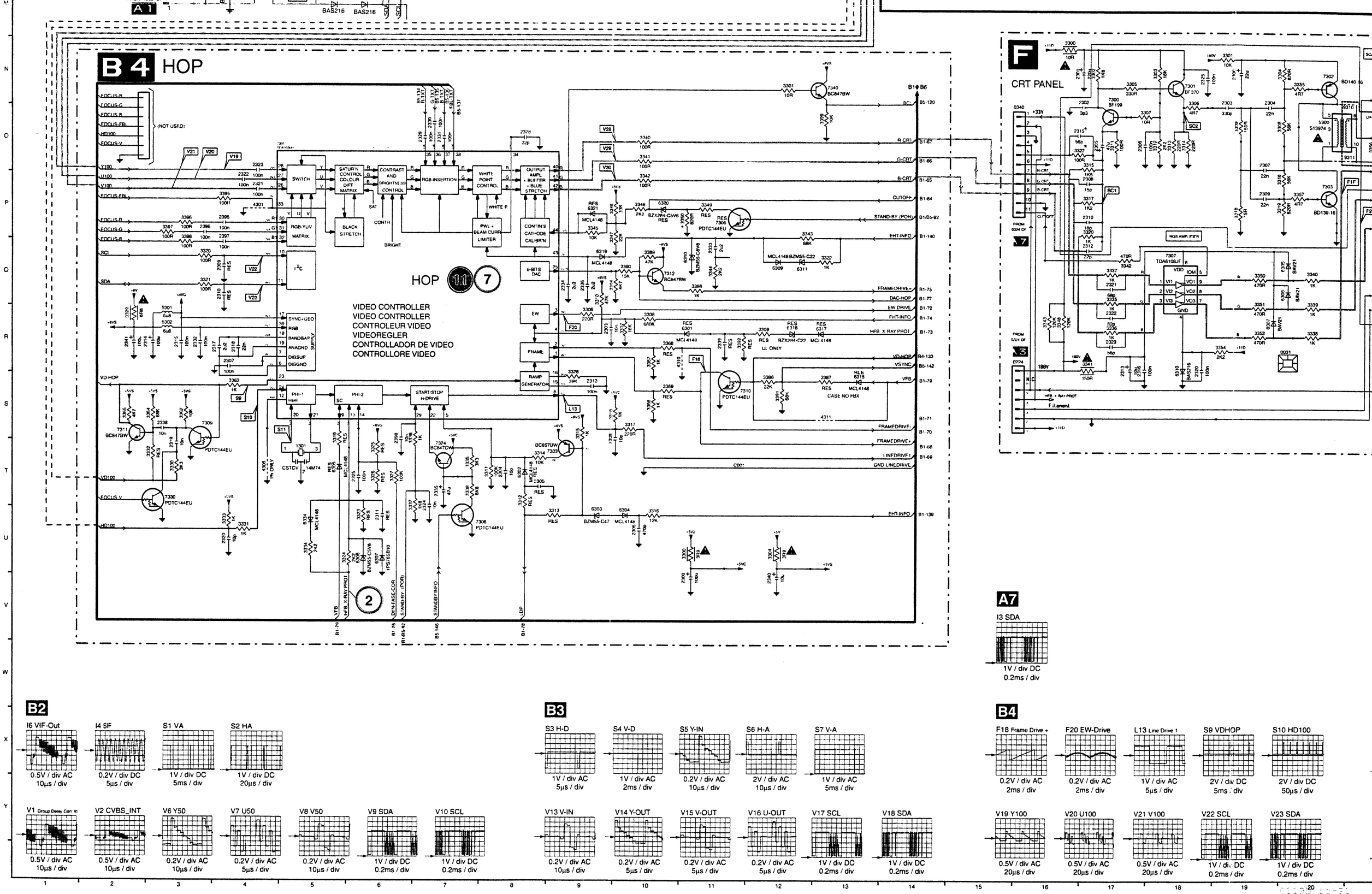

A1
B4 HOP
HOP 11 7
VIDEO CONTROLLER
VIDEO CONTROLLER
CONTROLEUR VIDEO
VIDEOREGLER
CONTROLLADOR DE VIDEO
CONTROLLORE VIDEO
SWITCH
SATURN CONTROL COLOUR DIFF MATRIX
CONTRAST AND BRIGHTNESS CONTROL
RGB-INSERTION
WHITE POINT CONTROL
OUTPUT AMPL + BUFFER + BLUE STRETCH
RGB-YUV MATRIX
BLACK STRETCH
PWL + BEAM CURR LIMITER
CONTIN'S CATHODE CALIBRN
6-BITS DAC
EW
FRAME
RAMP GENERATOR
PHI-1
PHI-2
START/STOP H-DRIVE
CASE NO FBX
F
CRT PANEL
A7
I3 SDA
1V / div DC
0.2ms / div
B2
I6 VIF-Out
0.5V / div AC
10µs / div
I4 SIF
0.2V / div DC
5µs / div
S1 VA
1V / div DC
5ms / div
S2 HA
1V / div DC
20µs / div
V1 Group Delay Con In
0.5V / div AC
10µs / div
V2 CVBS_INT
0.5V / div AC
10µs / div
V6 Y50
0.2V / div AC
10µs / div
V7 U50
0.2V / div AC
5µs / div
V8 V50
0.2V / div AC
10µs / div
V9 SDA
1V / div DC
0.2ms / div
V10 SCL
1V / div DC
0.2ms / div
B3
S3 H-D
1V / div AC
5µs / div
S4 V-D
1V / div AC
2ms / div
S5 Y-IN
0.2V / div AC
10µs / div
S6 H-A
2V / div AC
10µs / div
S7 V-A
1V / div AC
5ms / div
V13 V-IN
0.2V / div AC
10µs / div
V14 Y-OUT
0.2V / div AC
5µs / div
V15 V-OUT
0.2V / div AC
5µs / div
V16 U-OUT
0.2V / div AC
5µs / div
V17 SCL
1V / div DC
0.2ms / div
V18 SDA
1V / div DC
0.2ms / div
B4
F18 Frame Drive +
0.2V / div AC
2ms / div
F20 EW-Drive
0.2V / div AC
2ms / div
L13 Line Drive 1
1V / div AC
5µs / div
S9 VDHOP
2V / div DC
5ms / div
S10 HD100
2V / div DC
50µs / div
V19 Y100
0.5V / div AC
20µs / div
V20 U100
0.5V / div AC
20µs / div
V21 V100
0.5V / div AC
20µs / div
V22 SCL
1V / div DC
0.2ms / div
V23 SDA
1V / div DC
0.2ms / div

EM2E
AA 02.01

Service
Service
Service

Service Information

(GB) Changes in Course of Production

INTRODUCTION ANTI-MOIRÉ PANEL
From production start onwards, an anti-moiré panel was introduced in the 29" 4:3 Real Flat sets with Philips CRT. This anti-moiré circuitry is combined with the DC-shift panel (assy 12nc is 3104 328 16661).

Involved sets:
- 29PT9007.
- 29PT9047.

Circuit diagram (G), layouts and partslist are published.

INTRODUCTION OF NEW SSB PANEL
During production, a new SSB panel is introduced. The layout of the copper pattern has been changed to version 8. Below, you will find the most important changes.

Diagram B4 (HOP):
- A new dimensioning of the HOP slow-start circuit (items 3335, 3338 and 2335).
- A new flash circuit (items 6313 and 6314 are added) around the HOP (diagram B4).

Diagram B5 (OTC):
- A new flash reset circuitry is added, to prevent NVM overwriting.
- To solve TXT-jitter, two transistors (7012 and 7013) were added, to improve the steepness of the H_{SYNC} and V_{SYNC} pulses. This change is implemented together with new software.

Circuit diagrams (B4 and B5), layouts and partslist are published.

(D) Änderungen bei der Produktion

EINFÜHRUNG DES ANTI-MOIRÉ-PANELS
Seit Beginn der Produktion enthalten die 29" 4:3 Real Flat Geräte mit Philips Kathodenstrahlröhre ein Anti-Moiré Panel. Diese Anti-Moiré Schaltung wird mit dem Gleichstromänderungs-Panel (Assy 12nc ist 3104 328 16661) kombiniert.

Betroffene Geräte:
- 29PT9007.
- 29PT9047.

Der Schaltplan (G), die Layouts und die Teileliste wurden veröffentlicht.

EINFÜHRUNG DES NEUEN SSB-PANELS
Während der Produktion wird das neue Klein Signal Platine (SSB-Panel) eingeführt. Das Layout der Kupferstruktur wurde zu Version 8 geändert. Nachstehend werden die wichtigsten Änderungen beschrieben

Schaltplan B4 (HOP):
- Eine neue Dimension von HOP Slow Start Schaltungen (Teile 3335, 3338 und 2335).
- Eine neue Flash-Schaltung um den HOP (Teile 6313 und 6314 werden hinzugefügt). (Schaltplan B4)

Schaltplan B5 (OTC):
- Es wird eine neue Rückstell Schaltung für den Flash-Speicher hinzugefügt, um das Überschreiben des nicht-flüchtigen Speichers zu verhindern.
- Um TXT-Bildschwankungen zu beheben, wurden zur Verbesserung der Steilheit der Impulse HSYNC und VSYNC zwei Transistoren (7012 und 7013) hinzugefügt. Diese Änderung wird zusammen mit neuer Software implementiert.

Die Schaltpläne (B4 und B5), die Layouts und die Teileliste wurden veröffentlicht.

©Copyright 2002 Philips Consumer Electronics B.V. Eindhoven, The Netherlands. All rights reserved. No part of this publication may be reproduced, stored in a retrieval system or transmitted, in any form or by any means, electronic, mechanical, photocopying, or otherwise without the prior permission of Philips.

Published by JA 0262 Service PaCE Printed in the Netherlands Subject to modification 3122 785 40590

PHILIPS

(F) Modifications en cours de production

INTRODUCTION D'UNE PLATINE ANTI-MOIRÉ
Une platine anti-moiré a été introduite dans les postes 4:3 Real Flat de 29" équipés d'un tube cathodique Philips depuis le début de la production. Ce circuit anti-moiré est combiné à la platine à décalage CC réglable (réf. 12nc 3104 328 16661).

Postes concernés :
- 29PT9007.
- 29PT9047.

Les schémas de câblage, tracés et listes de pièces correspondants sont publiés.

INTRODUCTION D'UNE NOUVELLE PLATINE PETITS SIGNAUX
Une nouvelle platine petits signaux (SSB) a été introduite au cours de la production. Le tracé des pistes de cuivre a été modifié et correspond maintenant à la version 8. Les plus importantes modifications sont notées ci-dessous.

Schéma B4 (HOP)
- Le circuit HOP à démarrage lent a été redimensionné (éléments 3335, 3338 et 2335).
- Un nouveau circuit flash (les éléments 6313 et 6314 ont été ajoutés) a été disposé autour du processeur HOP (schéma B4).

Schéma B5 (OTC)
- Un nouveau circuit de réinitialisation flash a été ajouté afin d'empêcher l'écrasement de la mémoire non volatile (NVM).
- Pour résoudre le problème d'instabilité horizontale de l'image texte, deux transistors (7012 et 7013) ont été ajoutés afin d'améliorer la raideur des impulsions HSYNC et VSYNC. Cette modification est mise en œuvre conjointement avec le nouveau logiciel.

Les schémas de câblage (B4 et B5), tracés et listes de pièces correspondants sont publiés.

(E) Cambios durante la producción

INTRODUCCIÓN DEL PANEL ANTI-MOIRÉ
Desde que se ha iniciado la producción, se ha introducido un panel anti-moiré en los equipos de 29" 4:3 Real Flat con TRC de Philips. Esta circuitería anti-moiré se combina con el panel de desplazamiento de C.C. (el código 12NC del conjunto es 3104 328 16661).

Equipos implicados:
- 29PT9007.
- 29PT9047.

Se publican el diagrama de circuitos (G), esquemas y listas de piezas.

INTRODUCCIÓN DEL NUEVO PANEL SSB
Durante la producción, se ha introducido un nuevo panel SSB. El esquema del patrón de pistas de cobre ha cambiado a la versión 8. A continuación encontrará los cambios más importantes.

Diagrama B4 (HOP):
- Nuevo dimensionamiento de la circuitería de arranque lento del HOP (elementos 3335, 3338 y 2335).
- Nuevo circuito flash (se agregan los elementos 6313 y 6314) alrededor del HOP (diagrama B4).

Diagrama B5 (OTC):
- Se ha agregado una nueva circuitería flash de reset para evitar la sobrescritura de la NVM.
- Para solucionar el problema del temblor (jitter) de TXT, se han agregado dos transistores (7012 y 7013) para mejorar la pendiente de los pulsos HSYNC y VSYNC. Este cambio se ha implantado conjuntamente con el nuevo software.

Se publican los diagramas (B4 y B5), esquemas y listas de piezas.

(I) Modifiche in corso di produzione

INRODUZIONE DI UN PANNELLO ANTI-MOIRÉ
A partire dalla produzione in poi, è stato introdotto un pannello anti-moiré negli apparecchi 29" 4:3 Real Flat con CRT Philips. Questo circuito anti-moiré è associato ad un pannello di deviazione in C.C. (l'assemblaggio 12nc è 3104 328 16661).

Apparecchi interessati:
- 29PT9007.
- 29PT9047.

Schemi dei circuiti (G), layout ed elenco parti di ricambio sono pubblicati.

INTRODUZIONE DEL NUOVO PANNELLO SSB
Durante la produzione, viene introdotto un nuovo pannello SSB. Il layout del modello in rame è stato cambiato nella versione 8. Qui di seguito vengono elencate le modifiche più importanti.

Schema B4 (HOP):
- Nuovo dimensionamento del circuito HOP ad avvio ritardato (art. 3335, 3338 e 2335).
- Nuovo circuito flash (aggiunti gli art. 6313 e 6314) attorno all' HOP (schema B4).

Schema B5 (OTC):
- È stato aggiunto un nuovo circuito di flash reset per impedire la sovrascrittura NVM.
- Per risolvere il tremolio TXT, sono stati aggiunti due transistori (7012 e 7013), in modo da migliorare la ripidezza degli impulsi HSYNC e VSYNC. Questa modifica è stata implementata assieme al nuovo software.

Schemi del circuiti (B4 e B5), layout ed elenco parti di ricambio sono pubblicati.

Spare Parts List

Small Signal Panel [B]

Various

0302	2422 025 16542	CON 2P Male
1001	2422 543 89022	XTL 6MHz 20pF
1301	2422 540 98456	CER RES 12MHz
1305	2422 543 01184	XTL 4M433619 20pF
1308	2422 543 01158	XTL 3M579545 7pF
1407	2422 549 44324	FIL CER 5M5/5M74
1408	2422 549 44372	FIL SAW 38.9MHz OFWK3953L
1409	2422 549 44369	FIL SAW 38.9MHz OFWK9656L
1651	2422 543 89019	XTL 18M432 12pF
1701	2422 543 89018	XTL 12MHz 20pF

⊣⊢

2001	2222 867 15339	33pF 5% 50V
2002	4822 126 11669	27pF
2003	4822 126 13879	220nF 20% 16V
2004	4822 126 13879	220nF 20% 16V
2005	4822 126 14305	100nF 10% 16V
2006	4822 126 14305	100nF 10% 16V
2007	4822 126 14305	100nF 10% 16V
2008	4822 126 14305	100nF 10% 16V
2010	4822 122 33777	47pF 5% 63V
2011	4822 122 33777	47pF 5% 63V
2012	4822 122 33777	47pF 5% 63V
2013	4822 124 12095	100µF 20% 16V
2014	4822 126 14305	100nF 10% 16V
2015	4822 126 14305	100nF 10% 16V
2016	2020 021 91557	100µF 20% 16V
2017	4822 126 14305	100nF 10% 16V
2019	4822 126 14305	100nF 10% 16V
2020	4822 126 13883	220pF 5% 50V
2022	4822 126 14305	100nF 10% 16V
2023	4822 126 14305	100nF 10% 16V
2024	4822 126 14305	100nF 10% 16V
2025	4822 126 14305	100nF 10% 16V
2026	4822 126 14305	100nF 10% 16V
2027	4822 126 14305	100nF 10% 16V
2028	4822 126 14305	100nF 10% 16V
2029	4822 126 14305	100nF 10% 16V
2031	4822 126 14305	100nF 10% 16V
2032	4822 126 14305	100nF 10% 16V
2033	4822 126 14226	82pF 5% 50V
2034	4822 126 14226	82pF 5% 50V
2035	4822 126 14226	82pF 5% 50V
2036	4822 126 14226	82pF 5% 50V
2037	4822 126 14226	82pF 5% 50V
2038	4822 126 14305	100nF 10% 16V
2039	4822 126 14305	100nF 10% 16V
2300	4822 124 12095	100µF 20% 16V
2303	5322 126 11583	10nF 10% 50V
2304	4822 122 33741	10pF 10% 50V
2306	4822 126 13881	470pF 5% 50V
2307	4822 126 14305	100nF 10% 16V
2308	4822 122 33741	10pF 10% 50V
2313	4822 121 70159	0.1µF 16V
2314	4822 124 12095	100µF 20% 16V
2315	4822 126 14305	100nF 10% 16V
2317	4822 126 14491	2.2µF 10V
2318	4822 126 14494	22nF 10% 25V
2319	5322 126 11583	10nF 10% 50V
2320	4822 122 33741	10pF 10% 50V
2321	4822 126 14305	100nF 10% 16V
2322	4822 126 14305	100nF 10% 16V
2323	4822 126 14305	100nF 10% 16V
2324	5322 126 11583	10nF 10% 50V
2325	4822 126 14305	100nF 10% 16V
2328	4822 122 33761	22pF 5% 50V
2329	4822 126 14305	100nF 10% 16V
2330	4822 126 14305	100nF 10% 16V
2331	4822 126 14305	100nF 10% 16V
2332	4822 126 14305	100nF 10% 16V
2333	4822 126 14491	2.2µF 10V
2334	4822 126 14491	2.2µF 10V
2335	4822 124 12095	100µF 20% 16V
2336	4822 126 14491	2.2µF 10V
2338	5322 126 11583	10nF 10% 50V
2340	4822 124 23002	10µF 16V
2341	4822 124 12095	100µF 20% 16V
2350	4822 126 14305	100nF 10% 16V
2351	4822 126 14305	100nF 10% 16V
2352	4822 126 14305	100nF 10% 16V
2356	4822 126 14305	100nF 10% 16V
2357	4822 126 14305	100nF 10% 16V
2358	5322 126 11579	3.3nF 10% 63V
2359	4822 122 33752	15pF 5% 50V
2360	3198 016 33380	3.3pF 50V
2361	3198 016 31580	1.5pF 50V
2362	4822 126 11663	12pF
2365	4822 126 14305	100nF 10% 16V
2366	4822 126 14305	100nF 10% 16V
2367	4822 126 14305	100nF 10% 16V
2368	4822 126 14305	100nF 10% 16V
2369	4822 126 14305	100nF 10% 16V
2370	4822 126 14305	100nF 10% 16V
2371	4822 126 13193	4.7nF 10% 63V
2372	4822 126 14043	1µF 20% 16V
2373	4822 126 14305	100nF 10% 16V
2374	4822 126 14491	2.2µF 10V
2375	4822 126 14494	22nF 10% 25V
2376	4822 126 14305	100nF 10% 16V
2377	4822 124 12095	100µF 20% 16V
2378	4822 126 14305	100nF 10% 16V
2384	4822 126 14305	100nF 10% 16V
2406	4822 126 13883	220pF 5% 50V
2407	4822 126 13956	68pF 5% 63V
2408	3198 016 32780	2.7pF 50V
2409	4822 126 14491	2.2µF 10V
2410	4822 126 14472	1µF 10% 10V
2411	4822 126 14305	100nF 10% 16V
2412	4822 126 13193	4.7nF 10% 63V
2413	4822 124 80151	47µF 16V
2417	3198 017 44740	0603 10V 470nF
2418	4822 126 13956	68pF 5% 63V
2420	4822 122 33753	150pF 5% 50V
2501	4822 122 33777	47pF 5% 63V
2502	4822 122 32927	220nF 20% 50V
2503	4822 122 32927	220nF 20% 50V
2504	4822 122 32927	220nF 20% 50V
2505	4822 122 32927	220nF 20% 50V
2508	2020 021 91557	100µF 20% 16V
2546	4822 124 23002	10µF 16V
2547	4822 124 23002	10µF 16V
2548	4822 124 23002	10µF 16V
2549	4822 124 23002	10µF 16V
2550	4822 126 14241	330pF 50V
2551	5322 126 11579	3.3nF 10% 63V
2609	3198 016 31020	1nF 25V
2610	4822 126 14238	2.2nF 50V
2611	5322 126 11578	1nF 10% 50V
2629	4822 122 32927	220nF 20% 50V
2637	4822 122 32927	220nF 20% 50V
2640	4822 126 13879	220nF 20% 16V
2651	4822 126 14305	100nF 10% 16V
2652	4822 122 33777	47pF 5% 63V
2653	4822 122 32927	220nF 20% 50V
2654	4822 126 13881	470pF 5% 50V
2655	4822 126 13881	470pF 5% 50V
2656	4822 126 13881	470pF 5% 50V
2657	4822 126 13881	470pF 5% 50V
2658	4822 126 13881	470pF 5% 50V
2661	4822 122 32927	220nF 20% 50V
2662	4822 122 32927	220nF 20% 50V
2663	4822 126 13881	470pF 5% 50V
2664	4822 126 13881	470pF 5% 50V
2665	4822 124 12095	100µF 20% 16V
2666	4822 124 12095	100µF 20% 16V
2667	3198 016 33380	3.3pF 50V
2668	3198 016 33380	3.3pF 50V
2669	4822 124 23002	10µF 16V
2670	5322 126 11583	10nF 10% 50V
2673	3198 016 31020	1nF 25V
2674	3198 016 31020	1nF 25V
2675	4822 124 23002	10µF 16V
2677	2020 021 91554	10µF 20% 16V
2678	2020 021 91554	10µF 20% 16V
2679	4822 126 14305	100nF 10% 16V
2680	2020 021 91554	10µF 20% 16V
2681	4822 126 14305	100nF 10% 16V
2682	2020 021 91554	10µF 20% 16V
2685	3198 016 31020	0603 25V 1nF
2686	3198 016 31020	0603 25V 1nF
2690	4822 126 14305	100nF 10% 16V
2691	4822 126 14305	100nF 10% 16V
2693	4822 126 13883	220pF 5% 50V
2702	2020 021 91554	10µF 20% 16V
2703	4822 126 14305	100nF 10% 16V
2704	2020 021 91554	10µF 20% 16V
2706	2020 021 91557	100µF 20% 16V
2707	4822 126 14305	100nF 10% 16V
2708	2020 021 91554	10µF 20% 16V
2709	4822 126 14305	100nF 10% 16V
2710	2020 021 91554	10µF 20% 16V
2712	2020 021 91554	10µF 20% 16V
2713	4822 126 14305	100nF 10% 16V
2717	4822 126 14218	3.9pF 50V
2718	4822 126 11669	27pF
2719	4822 126 11663	12pF
2720	4822 126 14218	3.9pF 50V
2721	4822 126 11669	27pF
2723	4822 126 11663	12pF
2724	4822 126 14218	3.9pF 50V
2725	4822 126 11669	27pF
2726	4822 126 11663	12pF
2728	4822 126 14305	100nF 10% 16V
2729	4822 126 14225	56pF 5% 50V
2730	4822 126 14494	22nF 10% 25V
2731	4822 122 31765	100pF 2% 63V 1206
2733	4822 126 14494	22nF 10% 25V
2738	4822 126 14494	22nF 10% 25V
2743	4822 126 14494	22nF 10% 25V
2747	4822 126 14507	18pF 5% 50V
2748	4822 126 14507	18pF 5% 50V
2755	4822 126 14305	100nF 10% 16V
2756	4822 126 14305	100nF 10% 16V
2757	2020 021 91554	10µF 20% 16V
2758	4822 126 14305	100nF 10% 16V
2759	4822 126 14305	100nF 10% 16V
2760	4822 126 14305	100nF 10% 16V
2761	4822 126 14305	100nF 10% 16V
2762	4822 126 14305	100nF 10% 16V
2763	4822 126 14305	100nF 10% 16V
2764	4822 126 14305	100nF 10% 16V
2765	4822 126 14305	100nF 10% 16V
2766	4822 126 14305	100nF 10% 16V
2767	4822 126 14305	100nF 10% 16V
2770	4822 126 14305	100nF 10% 16V
2771	4822 126 14305	100nF 10% 16V
2772	4822 126 14305	100nF 10% 16V
2773	3198 016 31020	0603 25V 1nF
2774	4822 126 14305	100nF 10% 16V
2776	4822 126 14305	100nF 10% 16V
2785	4822 126 14305	100nF 10% 16V
2786	4822 126 14305	100nF 10% 16V
2788	4822 126 14305	100nF 10% 16V
2790	4822 126 14305	100nF 10% 16V
2792	4822 126 14305	100nF 10% 16V
2795	4822 126 14305	100nF 10% 16V
2796	4822 126 14305	100nF 10% 16V
2798	3198 016 36810	680pF 25V
2902	5322 126 11583	10nF 10% 50V
2908	4822 126 13883	220pF 5% 50V
2909	4822 126 13883	220pF 5% 50V
2910	4822 126 13883	220pF 5% 50V
2911	4822 126 13883	220pF 5% 50V
2912	4822 126 13883	220pF 5% 50V
2913	4822 126 13883	220pF 5% 50V
2914	4822 126 13883	220pF 5% 50V
2915	4822 126 13883	220pF 5% 50V
2916	4822 126 13883	220pF 5% 50V
2917	4822 126 13883	220pF 5% 50V

⊣▭⊢

3001	4822 051 30472	4k7 5% 0.062W
3002	4822 051 30472	4k7 5% 0.062W
3003	4822 117 13525	24k 1% 0.62W
3006	4822 051 30471	470Ω 5% 0.062W
3007	3198 031 14710	4 X 470Ω PM5
3008	4822 117 13526	150Ω 5% 0.63W
3009	4822 051 30689	68Ω 5% 0.063W
3011	4822 051 30471	470Ω 5% 0.062W
3012	4822 051 30101	100Ω 5% 0.062W
3013	4822 051 30103	10k 5% 0.062W
3014	4822 051 30682	6k8 5% 0.062W
3015	4822 051 30474	470k 5% 0.062W
3016	4822 051 30152	1k5 5% 0.062W
3017	4822 051 30472	4k7 5% 0.062W
3018	4822 051 30103	10k 5% 0.062W
3019	4822 051 30472	4k7 5% 0.062W
3020	4822 051 30103	10k 5% 0.062W
3021	4822 051 30103	10k 5% 0.062W
3023	4822 051 30101	100Ω 5% 0.062W
3024	4822 051 30273	27k 5% 0.062W
3025	4822 051 30221	220Ω 5% 0.062W
3026	4822 051 30103	10k 5% 0.062W
3027	4822 117 12925	47k 1% 0.063W
3028	4822 051 30101	100Ω 5% 0.062W
3029	4822 051 30103	10k 5% 0.062W
3030	4822 051 30101	100Ω 5% 0.062W
3031	4822 051 30103	10k 5% 0.062W

3032	4822 051 30101	100Ω 5% 0.062W
3033	4822 051 30103	10k 5% 0.062W
3034	4822 051 30101	100Ω 5% 0.062W
3035	3198 031 11010	4 X 100Ω PM5
3039	4822 051 30101	100Ω 5% 0.062W
3040	4822 051 30103	10k 5% 0.062W
3041	4822 051 30562	5k6 5% 0.062W
3044	3198 031 14720	4 X 4k7 PM5
3058	4822 051 30682	6k8 5% 0.062W
3059	2322 704 66201	620Ω PM1
3060	4822 051 30103	10k 5% 0.062W
3061	4822 051 30103	10k 5% 0.062W
3062	4822 051 30103	10k 5% 0.062W
3064	3198 031 11010	4 X 100Ω PM5
3073	4822 051 30471	470Ω 5% 0.062W
3074	4822 051 30471	470Ω 5% 0.062W
3075	4822 051 30103	10k 5% 0.062W
3076	4822 051 30471	470Ω 5% 0.062W
3077	4822 051 30272	2k7 5% 0.062W
3078	4822 051 30471	470Ω 5% 0.062W
3079	4822 051 30471	470Ω 5% 0.062W
3080	4822 051 30472	4k7 5% 0.062W
3081	4822 051 30471	470Ω 5% 0.062W
3083	4822 051 30471	470Ω 5% 0.062W
3084	4822 051 30103	10k 5% 0.062W
3085	4822 051 30471	470Ω 5% 0.062W
3086	4822 051 30471	470Ω 5% 0.062W
3087	4822 051 30471	470Ω 5% 0.062W
3088	4822 051 30471	470Ω 5% 0.062W
3089	4822 117 12925	47k 1% 0.063W
3090	4822 051 30471	470Ω 5% 0.062W
3091	4822 051 30471	470Ω 5% 0.062W
3092	4822 051 30221	220Ω 5% 0.062W
3095	4822 051 30008	0Ω jumper
3097	4822 051 30474	470k 5% 0.062W
3098	4822 051 30472	4k7 5% 0.062W
3099	4822 117 12925	47k 1% 0.063W
3300	2322 750 63908	3Ω9 PM5
3301	4822 051 30109	10Ω 5% 0.062W
3304	2322 750 63908	3Ω9 PM5
3306	4822 051 30221	220Ω 5% 0.062W
3307	4822 051 30183	18k 5% 0.062W
3308	4822 051 30684	680k 5% 0.062W
3310	4822 117 12925	47k 1% 0.063W
3311	4822 117 13632	100k 1% 0.62W
3314	4822 051 30103	10k 5% 0.062W
3315	4822 051 30102	1k 5% 0.062W
3316	4822 051 30123	12k 5% 0.062W
3317	4822 051 30221	220Ω 5% 0.062W
3318	4822 051 30102	1k 5% 0.062W
3320	4822 051 30101	100Ω 5% 0.062W
3321	4822 051 30101	100Ω 5% 0.062W
3322	4822 051 10102	1k 2% 0.25W
3324	4822 051 30222	2k2 5% 0.062W
3327	4822 117 13632	100k 1% 0.62W
3328	4822 051 30393	39k 5% 0.062W
3329	4822 117 13568	6Ω8 5% 1206
3330	4822 051 30332	3k3 5% 0.062W
3331	4822 051 30102	1k 5% 0.062W
3333	4822 051 30102	1k 5% 0.062W
3334	4822 051 30102	1k 5% 0.062W
3335	4822 117 12903	1k8 1% 0.063W
3336	4822 051 30102	1k 5% 0.062W
3337	4822 117 12903	1k8 1% 0.063W
3338	4822 051 30392	3k9 5% 0.063W
3340	4822 051 30101	100Ω 5% 0.062W
3341	4822 051 30101	100Ω 5% 0.062W
3342	4822 051 30101	100Ω 5% 0.062W
3343	4822 051 30683	68k 5% 0.062W
3344	4822 051 30222	2k2 5% 0.062W
3345	4822 051 30103	10k 5% 0.062W
3346	4822 051 30333	33k 5% 0.062W
3347	4822 051 30223	22k 5% 0.062W
3348	4822 051 30222	2k2 5% 0.062W
3361	4822 051 30151	150Ω 5% 0.062W
3362	4822 051 30103	10k 5% 0.062W
3363	4822 051 30102	1k 5% 0.062W
3364	4822 051 30683	68k 5% 0.062W
3365	4822 051 30472	4k7 5% 0.062W
3366	4822 051 30102	1k 5% 0.062W
3367	4822 051 30102	1k 5% 0.062W
3370	4822 051 30101	100Ω 5% 0.062W
3371	4822 051 30479	47Ω 5% 0.062W
3372	4822 051 30471	470Ω 5% 0.062W
3376	4822 051 30101	100Ω 5% 0.062W
3377	4822 051 30101	100Ω 5% 0.062W
3378	4822 051 30153	15k 5% 0.062W
3382	4822 051 30471	470Ω 5% 0.062W
3384	4822 051 30101	100Ω 5% 0.062W
3385	4822 051 30471	470Ω 5% 0.062W
3386	4822 051 30223	22k 5% 0.062W
3388	4822 051 30681	680Ω 5% 0.062W
3389	4822 117 12925	47k 1% 0.063W
3390	4822 051 30183	18k 5% 0.062W
3391	4822 051 30683	68k 5% 0.062W
3393	4822 117 13632	100k 1% 0.62W
3394	4822 051 30472	4k7 5% 0.062W
3400	4822 117 11152	4Ω7 5%
3406	4822 051 30479	47Ω 5% 0.062W
3411	4822 051 30472	4k7 5% 0.062W
3414	4822 051 30472	4k7 5% 0.062W
3415	4822 051 30222	2k2 5% 0.062W
3416	4822 117 13568	6Ω8 5% 1206
3418	4822 051 30391	390Ω 5% 0.062W
3419	4822 051 30759	75Ω 5% 0.062W
3435	4822 051 30472	4k7 5% 0.062W
3436	4822 051 30221	220Ω 5% 0.062W
3437	4822 051 30102	1k 5% 0.062W
3439	4822 051 30471	470Ω 5% 0.062W
3441	4822 051 30103	10k 5% 0.062W
3445	4822 051 30471	470Ω 5% 0.062W
3446	4822 051 30101	100Ω 5% 0.062W
3532	4822 051 30102	1k 5% 0.062W
3533	4822 051 30103	10k 5% 0.062W
3540	4822 051 30103	10k 5% 0.062W
3550	4822 051 30102	1k 5% 0.062W
3551	4822 051 30102	1k 5% 0.062W
3610	4822 117 12925	47k 1% 0.063W
3611	4822 117 12925	47k 1% 0.063W
3612	4822 117 12925	47k 1% 0.063W
3613	4822 117 12925	47k 1% 0.063W
3614	4822 117 12925	47k 1% 0.063W
3615	4822 117 12925	47k 1% 0.063W
3621	4822 051 30105	1M 5% 0.062W
3637	4822 051 30105	1M 5% 0.062W
3653	4822 051 30008	0Ω jumper
3654	4822 051 30008	0Ω jumper
3655	4822 051 30101	100Ω 5% 0.062W
3656	4822 051 30101	100Ω 5% 0.062W
3658	4822 051 30334	330k 5% 0.062W
3660	4822 051 30334	330k 5% 0.062W
3662	3198 017 31530	15nF 50V
3673	4822 051 30472	4k7 5% 0.062W
3680	3198 017 31530	15nF 50V
3683	4822 051 30272	2k7 5% 0.062W
3684	4822 051 30008	0Ω jumper
3685	4822 051 30008	0Ω jumper
3688	4822 051 30008	0Ω jumper
3689	4822 051 30008	0Ω jumper
3702	4822 117 12139	22Ω 5% 0.062W
3703	4822 051 30101	100Ω 5% 0.062W
3705	4822 051 30101	100Ω 5% 0.062W
3706	4822 051 30109	10Ω 5% 0.062W
3707	4822 051 30392	3k9 5% 0.063W
3708	4822 051 30272	2k7 5% 0.062W
3709	4822 051 30008	0Ω jumper
3710	4822 051 30391	390Ω 5% 0.062W
3711	4822 051 30102	1k 5% 0.062W
3712	4822 051 30391	390Ω 5% 0.062W
3713	4822 051 30391	390Ω 5% 0.062W
3714	4822 117 12139	22Ω 5% 0.062W
3716	4822 051 30472	4k7 5% 0.062W
3717	4822 051 30472	4k7 5% 0.062W
3718	4822 051 30221	220Ω 5% 0.062W
3719	4822 117 13574	1Ω5 5%
3720	4822 117 13574	1Ω5 5%
3721	4822 117 13572	22Ω 5%
3722	4822 117 13572	22Ω 5%
3725	4822 051 30105	1M 5% 0.062W
3728	4822 051 30101	100Ω 5% 0.062W
3731	4822 051 30101	100Ω 5% 0.062W
3732	4822 051 10102	1k 2% 0.25W
3733	4822 051 30101	100Ω 5% 0.062W
3739	4822 051 30101	100Ω 5% 0.062W
3740	4822 051 30008	0Ω jumper
3741	4822 051 30102	1k 5% 0.062W
3744	4822 051 30102	1k 5% 0.062W
3745	4822 051 30102	1k 5% 0.062W
3746	4822 051 30472	4k7 5% 0.062W
3747	4822 051 30689	68Ω 5% 0.063W
3748	4822 051 30689	68Ω 5% 0.063W
3749	4822 051 30689	68Ω 5% 0.063W
3754	4822 051 30109	10Ω 5% 0.062W
3755	4822 051 30008	0Ω jumper
3757	4822 051 30008	0Ω jumper
3759	4822 051 30008	0Ω jumper
3790	3198 031 11010	4 X 100Ω PM5
3791	3198 031 11010	4 X 100Ω PM5
3792	3198 031 11010	4 X 100Ω PM5
3793	3198 031 11010	4 X 100Ω PM5
3794	3198 031 11010	4 X 100Ω PM5
3795	3198 031 11010	4 X 100Ω PM5
3796	4822 051 30101	100Ω 5% 0.062W
3797	4822 051 30101	100Ω 5% 0.062W
3798	4822 117 13572	22Ω 5%

5301	4822 157 11876	6.8µH 10%
5302	4822 157 11876	6.8µH 10%
5403	2422 549 44461	COI VAR
5404	2422 535 95427	Bead 120R at 100MHz
5405	2422 535 95427	Bead 120R at 100MHz
5406	3198 018 33980	3.9uH PM10
5407	3198 018 56880	6.8uH PM10
5408	2422 549 44983	COI VAR
5409	3198 018 51080	1uH PM10
5410	3198 018 33370	0.33uH PM10
5651	2422 549 43769	Bead 30R at 100MHz
5652	2422 549 43769	Bead 30R at 100MHz
5653	2422 549 43769	Bead 30R at 100MHz
5654	4822 157 11716	Bead BLM21P300SPT
5701	4822 157 71206	Bead BLM21A601SPT
5702	2422 535 95427	Bead 120R at 100MHz
5703	4822 157 11716	Bead BLM21P300SPT
5704	4822 157 11716	Bead BLM21P300SPT
5705	2422 535 95427	Bead 120R at 100MHz
5706	4822 157 11778	5.6uH 10%
5707	4822 157 11074	100µH
5708	4822 157 11778	5.6uH 10%
5709	4822 157 11778	5.6uH 10%
5710	4822 157 11778	5.6uH 10%
5711	4822 157 11074	100µH
5713	4822 157 11074	100µH
5718	3198 018 33370	0.33uH PM10
5720	4822 157 11074	100µH
5911	4822 157 11074	100µH
5912	4822 157 11074	100µH
5913	4822 157 11074	100µH
5914	4822 157 11074	100µH
5915	4822 157 11074	100µH
5916	4822 157 11074	100µH
5917	4822 157 11074	100µH
5918	4822 157 11074	100µH
5919	4822 157 11074	100µH
5920	4822 157 11074	100µH
5921	4822 157 11074	100µH
5922	4822 157 11074	100µH
5923	4822 157 11074	100µH
5924	4822 157 11074	100µH
5925	4822 157 11074	100µH
5926	4822 157 11074	100µH
5927	4822 157 11074	100µH
5928	4822 157 11074	100µH
5929	4822 157 11074	100µH
5930	4822 157 11074	100µH
5931	4822 157 11074	100µH
5932	4822 157 11074	100µH
5933	4822 157 11074	100µH
5934	4822 157 11074	100µH
5935	4822 157 11074	100µH
5940	4822 157 11074	100µH
5941	4822 157 11074	100µH
5942	4822 157 11074	100µH
5943	4822 157 11074	100µH
5944	4822 157 11074	100µH
5947	4822 157 11074	100µH
5948	4822 157 11074	100µH
5949	4822 157 11074	100µH
5950	4822 157 11074	100µH
5951	4822 157 11074	100µH

6001	4822 130 11528	1PS76SB10
6002	4822 130 83757	MCL4148
6003	4822 130 11528	1PS76SB10
6303	4822 130 11594	BZX284-C47
6304	4822 130 83757	MCL4148
6306	9322 129 37685	DIO REG SM BZM55-C5V6 (TEG0)
6307	4822 130 11528	1PS76SB10
6309	4822 130 83757	MCL4148
6310	9322 129 38685	DIO REG SM BZM55-C6V8 (TEG0)
6311	9322 149 08685	DIO REG SM BZM55-C22 (VISH) R
6312	4822 130 83757	MCL4148
6313	9322 149 08685	DIO REG SM BZM55-C22 (VISH) R
6314	4822 130 83757	MCL4148
6319	4822 130 83757	MCL4148
6334	4822 130 83757	MCL4148
6403	4822 130 11525	1SS356
6652	9322 129 40685	BZM55-C10
6653	4822 130 83757	MCL4148

7001	9352 629 88557	SAA5801H/011
7002	9340 218 50115	BC857BW
7003	3198 010 42310	BC847BW
7004	3198 010 42310	BC847BW
7005	9322 116 74668	LD1117D33
7006	9965 000 07280	Software, see Prod.Surv.
7007	9322 157 20668	MSM51V18165F-60J
7008	3198 010 42310	BC847BW
7009	3198 010 42310	BC847BW
7010	9340 218 50115	BC857BW
7011	9322 156 81668	M24C32-WMN6TNKSA
7014	3198 010 42310	BC847BW
7015	9340 218 50115	BC857BW (PHSE)
7301	9352 685 88518	TDA9330H/N2/S2
7303	9340 218 50115	BC857BW (PHSE)
7308	9340 310 30215	PDTC144ET
7309	9340 310 30215	PDTC144ET
7310	9340 310 30215	PDTC144ET
7311	3198 010 42310	BC847BW
7312	3198 010 42310	BC847BW
7320	3198 010 42310	BC847BW
7322	3198 010 42310	BC847BW
7323	9352 625 24518	TDA9321H/N2
7324	9340 217 80115	BC847CW
7340	3198 010 42310	BC847BW
7403	4822 130 60511	BC847B
7407	4822 130 60373	BC856B
7411	4822 130 60511	BC847B
7651	9322 169 38702	MSP3411G-FH-B8
7652	9351 874 90118	74HC4052PW
7656	9340 425 20115	BC847BS
7674	3198 010 42310	BC847BW
7680	3198 010 42310	BC847BW
7701	9340 218 50115	BC857BW
7702	3198 010 42310	BC847BW
7704	4822 209 73852	PMBT2369
7708	4822 209 90034	SAA4990H/V0
7709	9352 640 20557	SAA4978H/V203
7713	9322 116 74668	LD1117D33
7714	4822 209 17307	MSM54V12222A-30JS
7715	4822 209 17307	MSM54V12222A-30JS
7716	3104 317 42341	FBX Software R_EP_2

DC-shift + Anti-Moiré [G]

Various

0317	4822 265 20723	CON 2P Male
0318	4822 265 20723	CON 2P Male
0325	2422 025 16382	CON 3P Male
0329	2422 025 16382	CON 3P Male
0395	2422 025 16407	CON 3P Male
1430	2422 086 10581	Fuse 400mA

2430	4822 122 31177	470pF 10% 500V
2431	4822 122 31177	470pF 10% 500V
2640	4822 124 11767	470µF 20% 25V
2641	4822 126 14305	100nF 10% 16V

3640	4822 051 30103	10k 5% 0.062W
3641	4822 051 30223	22k 5% 0.062W
3642	4822 052 10229	22Ω 5% 0.33W
3648	5322 117 13029	47k 1% 0.063W
3649	2322 704 65603	56k 1% 0.063W
3650	5322 117 13037	2k2 1% 0.063W
3651	4822 051 30221	220Ω 5% 0.062W
3652	4822 051 30152	1k5 5% 0.062W
3999	4822 051 30102	1k 5% 0.062W

5430	3128 138 38911	DC SHIFT COIL

6432	9340 317 00133	BYD33V
6433	9340 317 00133	BYD33V
6640	4822 130 83757	MCL4148
6641	9340 548 67115	PDZ22B
6642	4822 130 11148	UDZ4.7B
6643	9340 548 52115	PDZ5.1B
6646	4822 130 83757	MCL4148

7640	9337 133 90653	74HCT74D
7642	4822 130 60373	BC856B

Electrical Diagrams and Print-Layouts

SSB: HOP

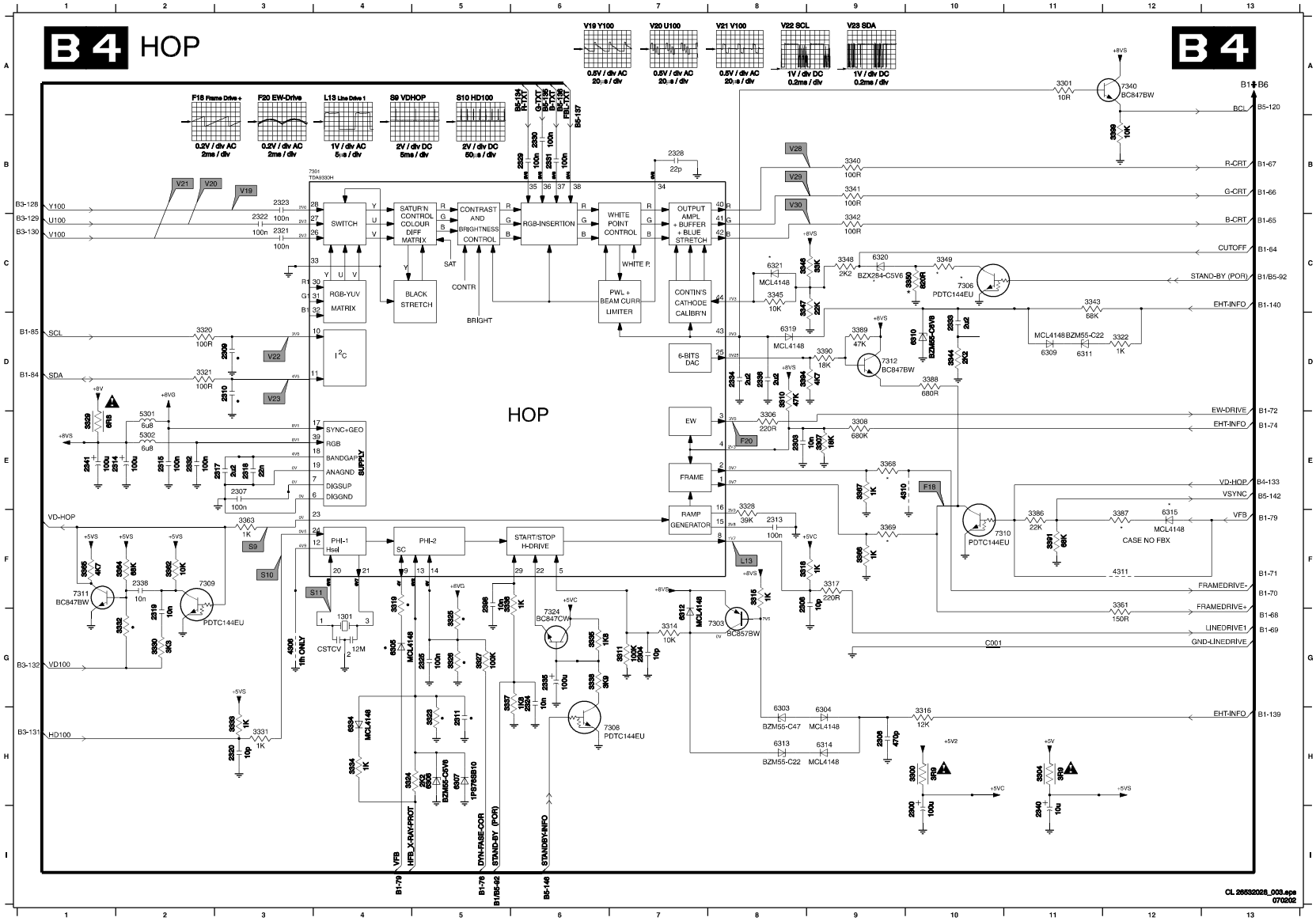

1301 G4	3367 E9
2300 I10	3368 E9
2303 E8	3369 F9
2304 G7	3386 F11
2306 H9	3387 F12
2307 E3	3388 D10
2308 F8	3389 D9
2309 D3	3390 D9
2310 D3	3391 F11
2311 H5	3394 D8
2313 F8	3399 B12
2314 E2	4306 G3
2315 E2	4310 E10
2317 E3	4311 F12
2318 E3	5301 E2
2319 G2	5302 E2
2320 H3	6303 H8
2321 C3	6304 H9
2322 C3	6305 G4
2323 B3	6306 H5
2324 G6	6307 H5
2325 G5	6309 D11
2328 B7	6310 D10
2329 B6	6311 D11
2330 B6	6312 G7
2331 B6	6313 H8
2332 E2	6314 H9
2333 D10	6315 F12
2334 D8	6319 D8
2335 G6	6320 C9
2336 D8	6321 C8
2338 F2	6334 H4
2340 I11	7301 B3
2341 E1	7303 G8
2398 F5	7306 C10
3300 H10	7308 H6
3301 A11	7309 F3
3304 H11	7310 F11
3306 E6	7311 F1
3307 E9	7312 D9
3308 E9	7324 G6
3310 D8	7340 A12
3311 G7	C001 G10
3314 G7	
3315 F8	
3316 H10	
3317 F9	
3318 F8	
3319 F4	
3320 D2	
3321 D2	
3322 D12	
3323 H5	
3324 H4	
3325 G5	
3326 G5	
3327 G5	
3328 E8	
3329 E1	
3330 G2	
3331 H3	
3332 G2	
3333 H3	
3334 H4	
3335 G6	
3336 F5	
3337 G5	
3338 G6	
3340 B9	
3341 B9	
3342 C9	
3343 C11	
3344 D10	
3345 C8	
3346 C8	
3347 C8	
3348 C9	
3349 C10	
3350 C10	
3361 F12	
3362 F2	
3363 F3	
3364 F2	
3365 F1	
3366 F9	

SSB: OTC

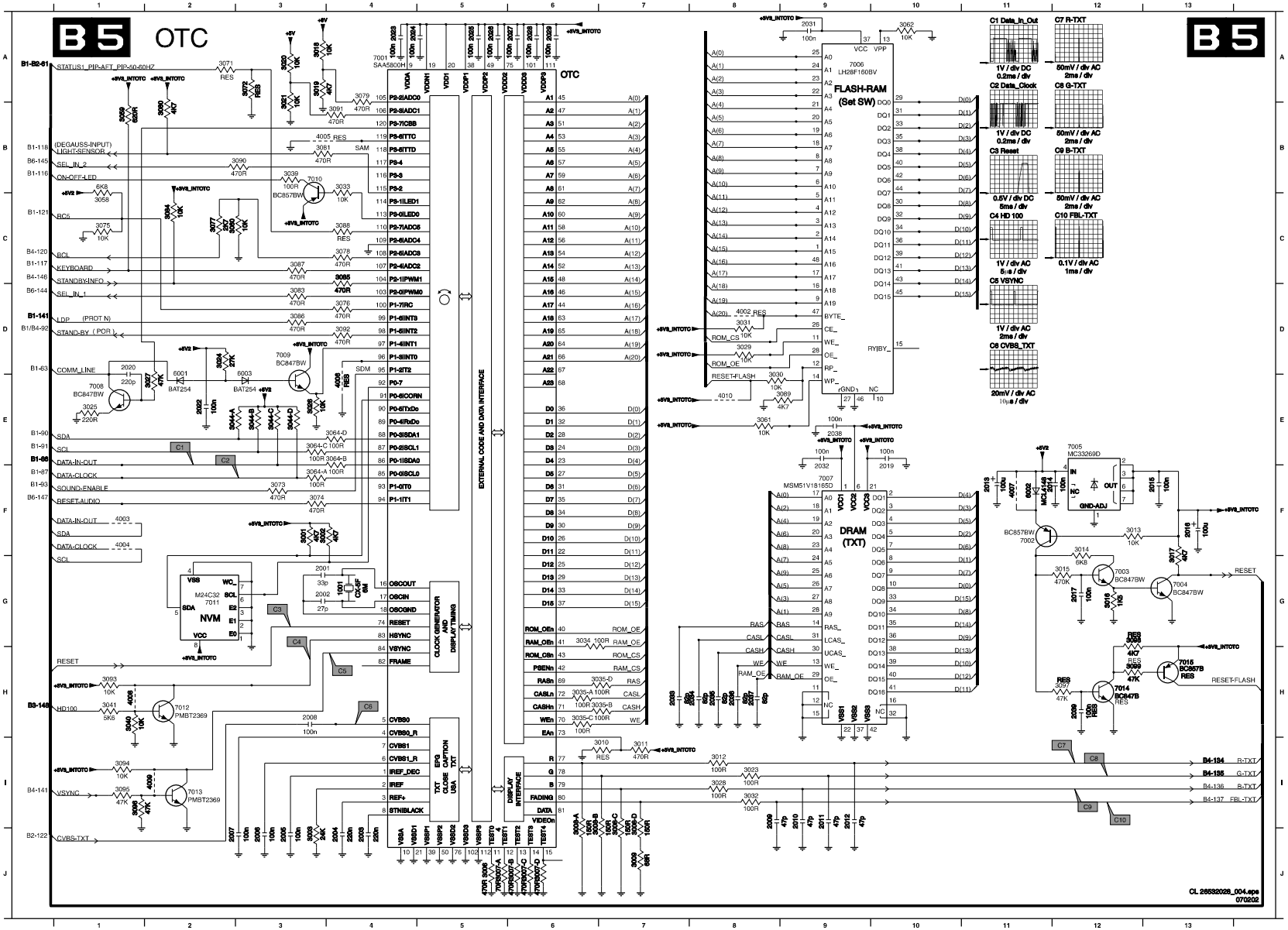

1001 G4
2001 G3
2002 G3
2003 J4
2004 J4
2005 J3
2006 J3
2007 J2
2008 H3
2009 I8
2010 I9
2011 I9
2012 I9
2013 F11
2014 F11
2015 F13
2016 F13
2017 G12
2019 E10
2020 D1
2022 E2
2023 A4
2024 A4
2025 A5
2026 A5
2027 A6
2028 A6
2029 A6
2031 A9
2032 E9
2033 H7
2034 H8
2035 H8
2036 H8
2037 H8
2038 E9
2039 H12
3001 F3
3002 F3
3003 J3
3006 J5
3007-A J5
3007-B J6
3007-C J6
3007-D J6
3008-A I6
3008-B I6
3008-C I7
3008-D I7
3009 J7
3010 I7
3011 I7
3012 I8
3013 F12
3014 F12
3015 G12
3016 G12
3017 F13
3018 A3
3019 A3
3020 A3
3021 A3
3023 I8
3024 D2
3025 E1
3026 E3
3027 E2
3028 I8
3029 D8
3030 E8
3031 D8
3032 I8
3033 B4
3034 G6
3035-A H6
3035-B H7
3035-C H6
3035-D H7
3039 B3
3040 H1
3041 H1
3044-A E2
3044-B E3
3044-C E3
3044-D E3
3056 C1
3059 B1
3060 C2
3061 E8
3062 A10
3064-A F3
3064-B E4
3064-C E3
3064-D E4
3071 A2
3072 A3
3073 F3
3074 F3
3075 C1
3076 D4
3077 C2
3078 C4
3079 A4
3080 B2
3081 B3
3083 D3
3084 C2
3085 C4
3086 D3
3087 C3
3088 C4
3089 E9
3090 B3
3091 B4
3092 D4
3093 H1
3094 I1
3095 I1
3096 I1
3097 H12
3098 G12
3099 H12
4002 D6
4003 F1
4004 F1
4005 B3
4006 E4
4007 F11
4008 H1
4009 I2
4010 E8
6001 E2
6002 F11
6003 E3
7001 A4
7002 F11
7003 G12
7004 G13
7005 E12
7006 A9
7007 F9
7008 E1
7009 D3
7010 B3
7011 G2
7012 H2
7013 I2
7014 H12
7015 H13

Layout SSB (Overview LOT Side)

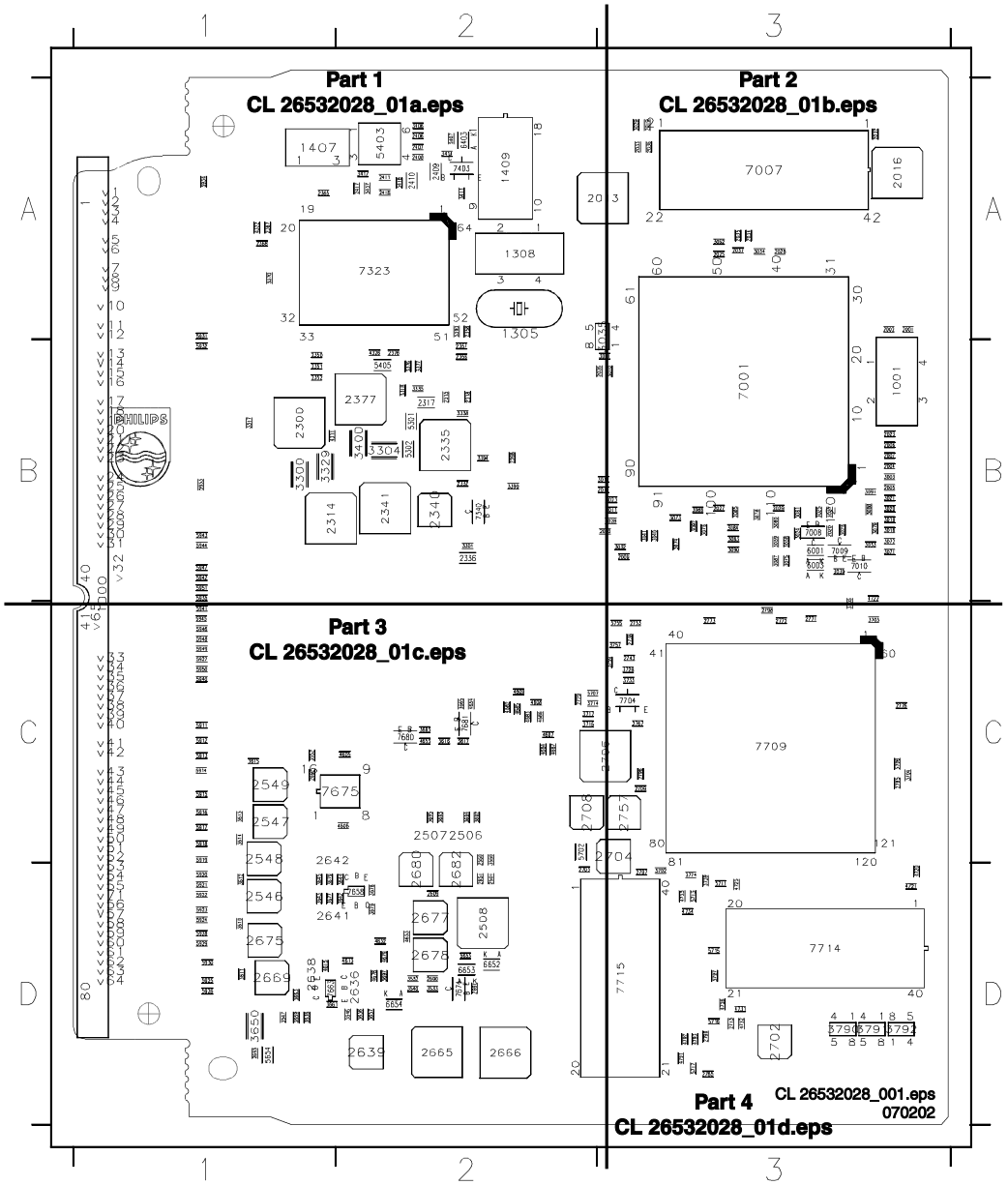

1000	B1	2550	C2	3072	B3	3683	C2	5716	D3
1001	B3	2609	D2	3073	B3	3692	C2	5717	D3
1305	A2	2636	D2	3074	B3	3693	C2	5911	C1
1308	A2	2638	D1	3075	B3	3694	C2	5912	C1
1407	A1	2639	D1	3076	B3	3695	C2	5913	C1
1409	A2	2641	D1	3078	B3	3697	D2	5914	C1
2001	A3	2642	C2	3079	B3	3702	D3	5915	C1
2002	A3	2651	D2	3080	B3	3703	C3	5916	C1
2004	B3	2665	D2	3081	B3	3704	C3	5917	C1
2005	B3	2666	D2	3083	B3	3705	C3	5918	C1
2006	B3	2669	D1	3084	B3	3706	C3	5919	C1
2007	B3	2675	D1	3085	B3	3714	C2	5920	D1
2009	B3	2677	D2	3086	B3	3716	C2	5921	D1
2010	B3	2678	D2	3087	B3	3717	C2	5922	D1
2011	B3	2680	D2	3088	B3	3728	C3	5923	D1
2012	B3	2682	C2	3090	B3	3733	C3	5924	D1
2013	A3	2690	D2	3091	B3	3739	D3	5925	D1
2016	A3	2691	D2	3092	B3	3755	C3	5926	D1
2019	A3	2692	C1	3300	B1	3757	C3	5927	C1
2020	B3	2693	D1	3301	B2	3759	C3	5928	D1
2023	B3	2702	D3	3304	B2	3790	D3	5929	D1
2025	A3	2703	D2	3317	B1	3791	D3	5930	D1
2026	B3	2704	C3	3318	B2	3792	D3	5931	A1
2027	B3	2706	C2	3329	B2	3797	D3	5932	B1
2028	A3	2708	C2	3335	B2	4311	B1	5933	B1
2029	B3	2709	C3	3338	B2	4322	A1	5934	A1
2032	A3	2713	D3	3370	A1	4326	B2	5935	B1
2033	A3	2729	C2	3376	B2	4605	C2	5940	C1
2034	A3	2733	C3	3377	B2	4606	C2	5941	C1
2035	A3	2738	C3	3393	A2	4607	C2	5942	B1
2036	A3	2743	C3	3394	B2	4608	C2	5943	B1
2037	A3	2757	C3	3399	B2	4609	C2	5944	B1
2300	B1	2765	D3	3400	B2	4613	D2	5945	C1
2314	B1	2767	C3	3406	A2	4615	D1	5946	C1
2315	B2	2771	C3	3411	A2	4632	D2	5947	B1
2317	B2	2772	C3	3414	A2	4633	D2	5948	C1
2318	B2	2773	C3	3417	A2	4653	C2	5949	C1
2332	B2	2774	D3	3418	A2	4654	C2	5950	C1
2335	B2	2776	C3	3437	A2	4678	D2	5951	B1
2336	B2	2785	C3	3532	D2	4679	D2	6001	B3
2340	B2	2790	D3	3533	D2	4682	C2	6003	B3
2341	B2	2796	C3	3540	D2	4683	C2	6403	A2
2350	B1	2797	D3	3546	D2	4684	C2	6652	D2
2351	B1	2798	C3	3547	D1	4685	C2	6653	D2
2352	B1	3003	B3	3550	C2	4686	C2	6654	D2
2356	B2	3010	B3	3552	C1	4687	C2	7001	B3
2357	B2	3011	B3	3610	D1	4720	D3	7007	A3
2358	A2	3012	B3	3611	D1	4721	D3	7008	B3
2365	A1	3018	B3	3612	D1	4722	B3	7009	B3
2367	A1	3019	B3	3613	C1	4723	D3	7010	B3
2368	A1	3020	B3	3614	C1	4726	D3	7323	A1
2376	B2	3021	B3	3615	C1	4731	D3	7340	B2
2377	B2	3023	B3	3616	C2	4732	D3	7403	A2
2398	B2	3024	B3	3617	C2	4733	D3	7658	D2
2406	A2	3025	B3	3636	D2	4734	D3	7663	D1
2407	A2	3026	B3	3638	D1	4791	D3	7674	D2
2408	A2	3027	B3	3642	D2	4792	D3	7675	C2
2409	A2	3028	B3	3643	D1	4793	D3	7680	C2
2410	A2	3029	A3	3644	D2	5301	B2	7681	C2
2411	A2	3032	B3	3645	D1	5302	B2	7704	C3
2417	A2	3033	B3	3650	D1	5403	A2	7709	D3
2418	A2	3034	A3	3657	D2	5405	B2	7714	D3
2501	D2	3035	A3	3659	D1	5407	A2	7715	D3
2506	C2	3039	B3	3661	D1	5653	D2		
2507	C2	3040	B3	3663	D1	5654	D1		
2508	D2	3041	B3	3665	C2	5702	C2		
2546	D1	3058	B3	3676	D2	5707	C2		
2547	C1	3059	B3	3677	D1	5711	D3		
2548	C1	3062	A3	3678	D2	5713	D3		
2549	C1	3071	B3	3679	D1	5715	D3		

Layout SSB (Part 1 LOT Side)

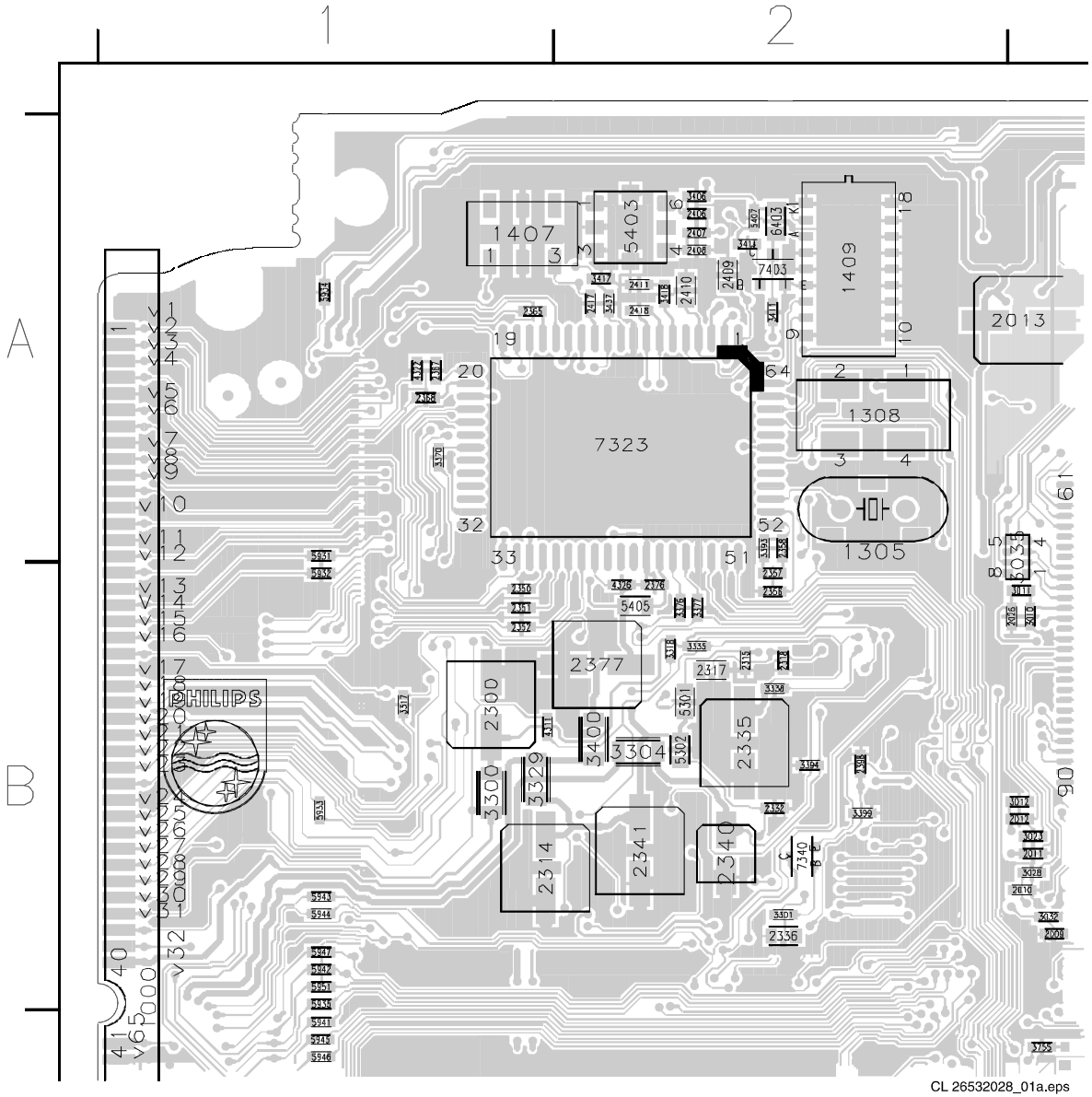

CL 26532028_01a.eps
070202

Layout SSB (Part 2 LOT Side)

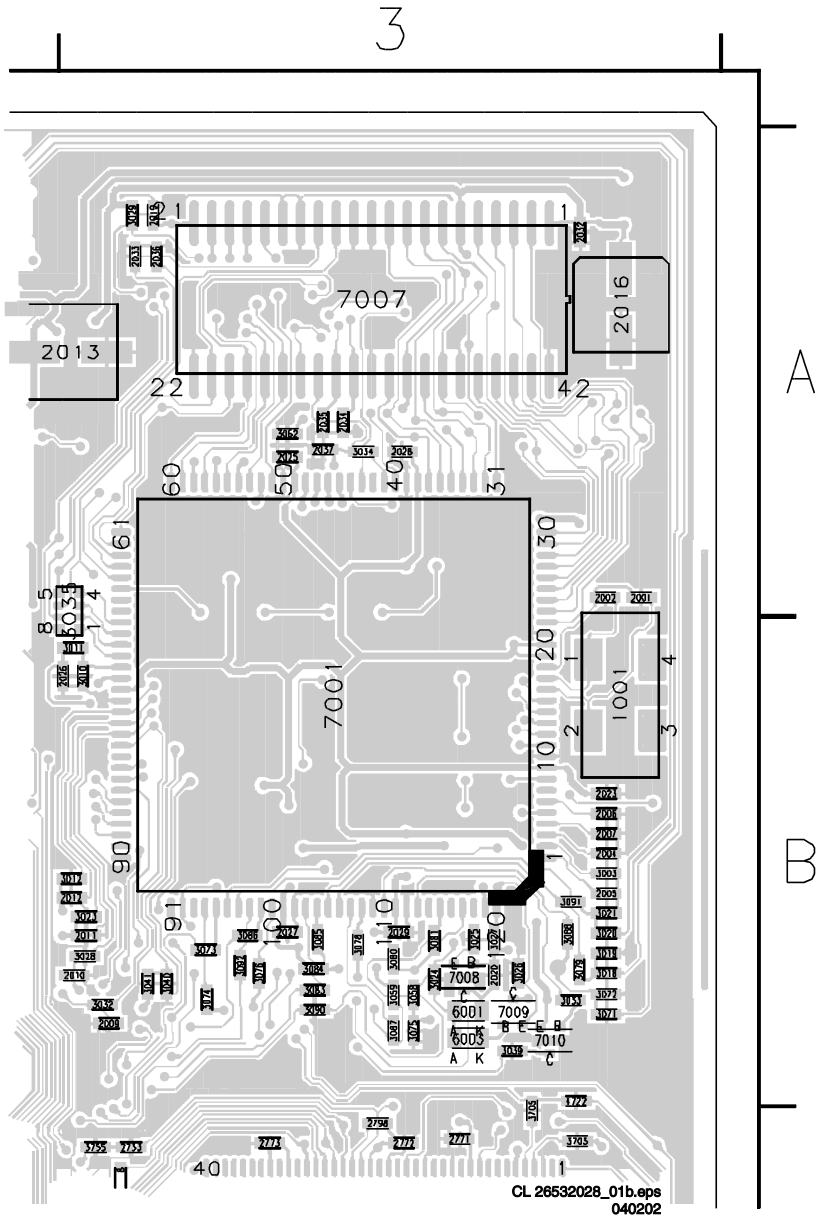

Layout SSB (Part 4 LOT Side)

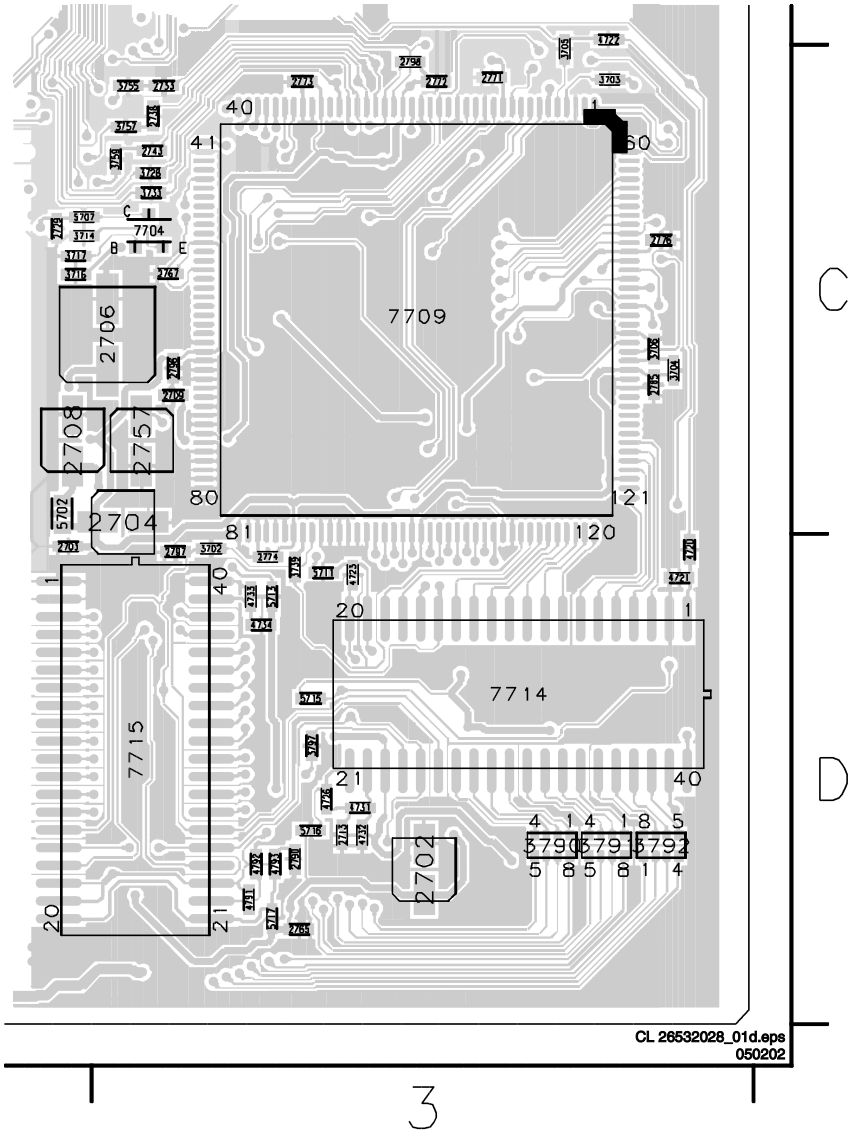

Layout SSB (Part 3 LOT Side)

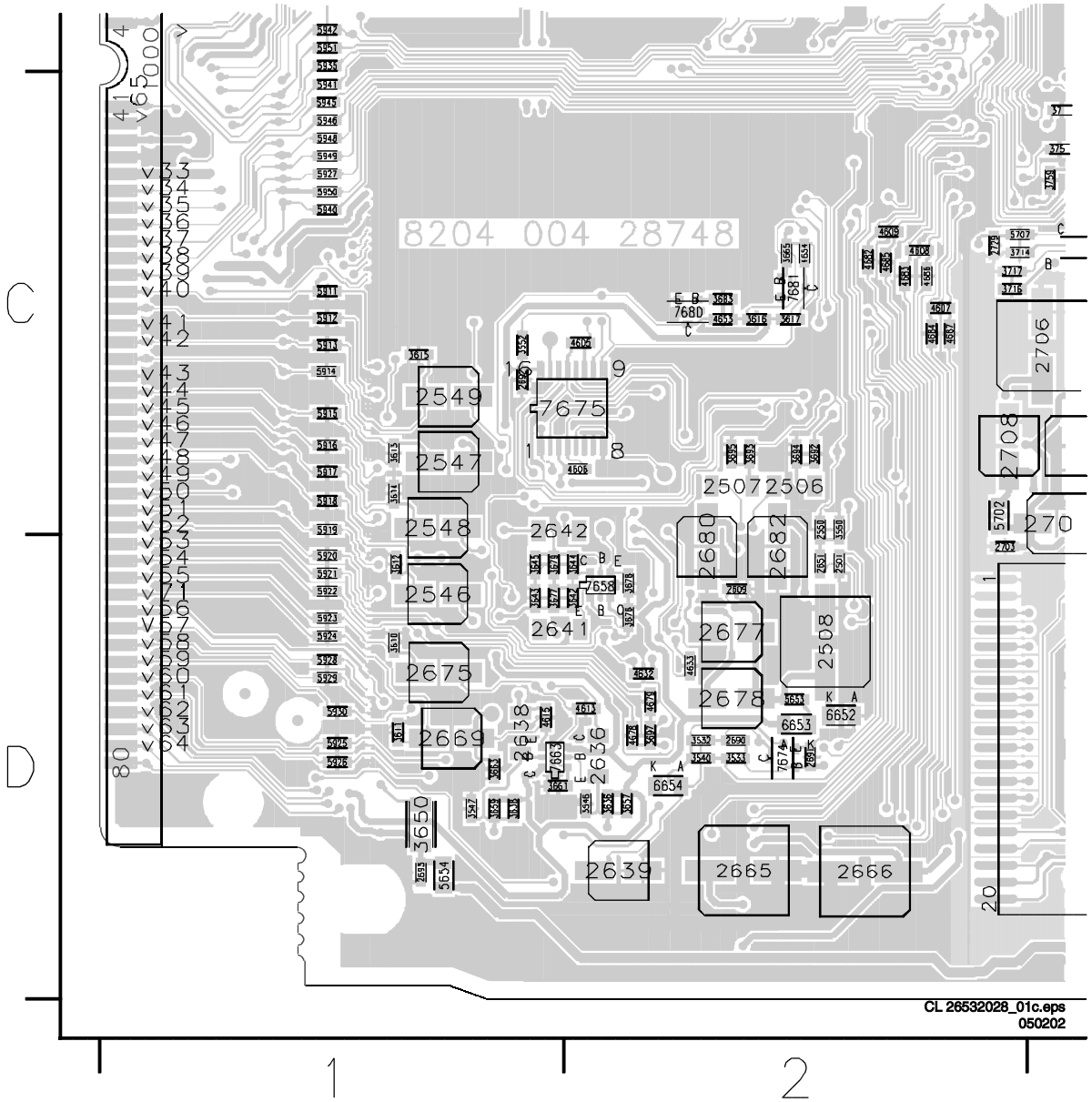

Layout SSB (Overview Tuner Side)

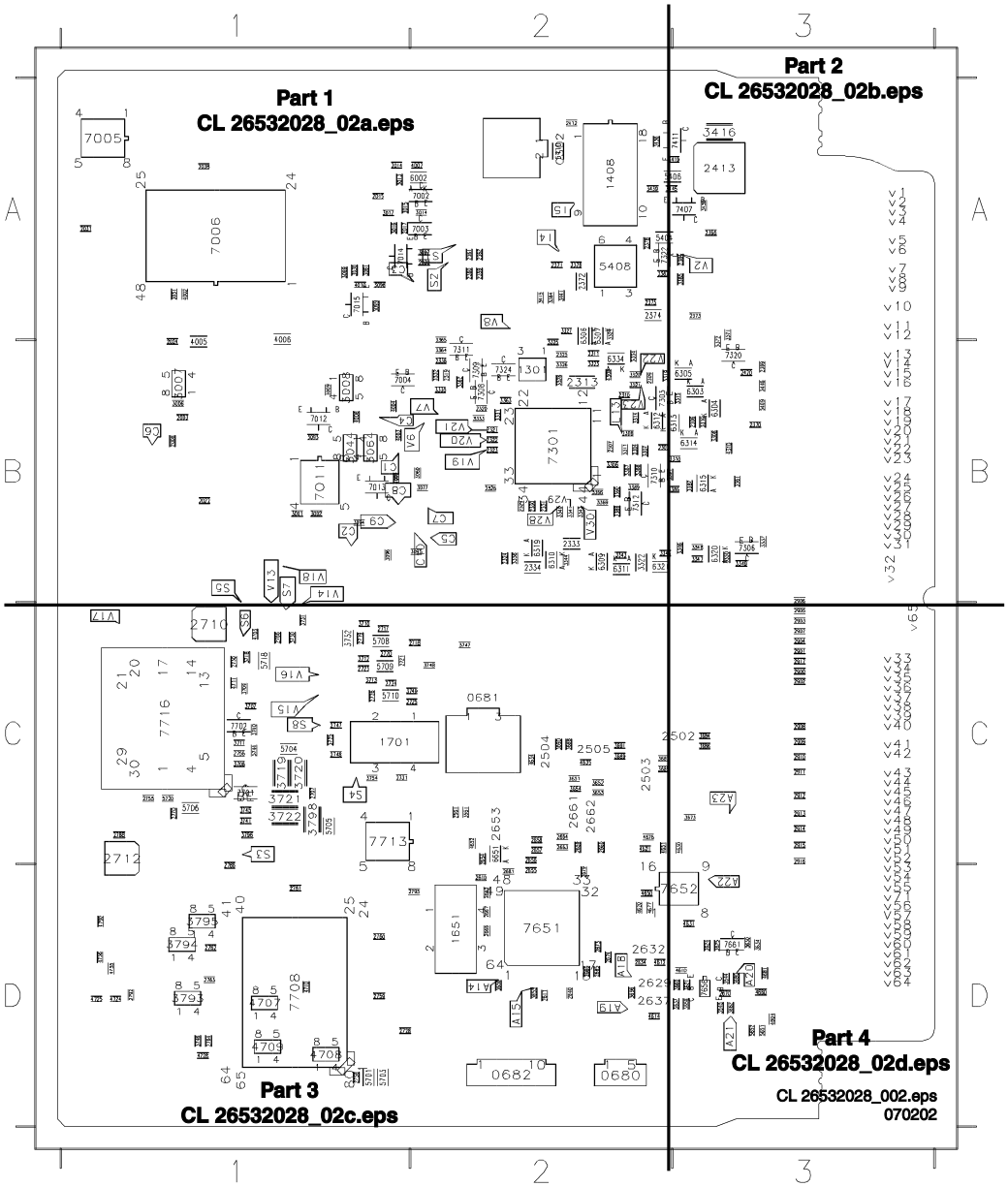

0302	A2	2637	D2	2914	C3	3365	A2	3732	C1	5718	C1
0680	D2	2640	D2	2915	C3	3366	B2	3740	C1	5720	C1
0681	C2	2652	D2	2916	C3	3367	B2	3741	C1	6002	A2
0682	D2	2653	C2	2917	C3	3368	B2	3744	C1	6303	B3
1000	B3	2654	C2	3001	B1	3369	B2	3745	C1	6304	B3
1301	B2	2655	D2	3002	B1	3371	A3	3746	D1	6305	B3
1305	A2	2656	C2	3006	B1	3372	B3	3747	C2	6306	A2
1408	A2	2657	C2	3007	B1	3378	A2	3748	C2	6307	A2
1651	D2	2658	C2	3008	B1	3382	A2	3749	C2	6309	B2
1701	C1	2659	C2	3009	B1	3384	A2	3754	C1	6310	B2
2003	B1	2660	C2	3013	A1	3385	A3	3793	D1	6311	B2
2008	B1	2661	C2	3014	A2	3386	B3	3794	D1	6312	B2
2014	A1	2662	C2	3015	A1	3387	B3	3795	D1	6313	B3
2015	A1	2663	C2	3016	A1	3388	B2	3796	C1	6314	B3
2017	A1	2664	C2	3017	A1	3389	B2	3798	C1	6315	B3
2022	B1	2667	D2	3030	A1	3390	B2	4002	A1	6319	B2
2024	B1	2668	D2	3031	A1	3391	B2	4003	B1	6320	B3
2031	A1	2670	D3	3044	B1	3415	A2	4004	B1	6321	B2
2038	A1	2673	D2	3060	B2	3416	A3	4005	B1	6334	A2
2039	A2	2674	D2	3061	A1	3419	A3	4006	A1	6651	C2
2303	B2	2679	D2	3064	B1	3435	A3	4007	A2	7002	A2
2304	B2	2681	D2	3077	B2	3436	A2	4008	B1	7003	A2
2306	B3	2685	D2	3089	A1	3439	A2	4009	B1	7004	B1
2307	B2	2686	D2	3093	B1	3441	A2	4010	A1	7005	A1
2308	B2	2707	C1	3094	B1	3445	A2	4306	B2	7006	A1
2309	B2	2710	C1	3095	B2	3446	B3	4310	B3	7011	B1
2310	B2	2712	D1	3096	B1	3544	D3	4604	D3	7012	B1
2311	B2	2717	C1	3097	A2	3545	D3	4610	D3	7013	B1
2313	B2	2718	C2	3098	A1	3551	C2	4612	D2	7014	A2
2319	B2	2719	C1	3099	A1	3621	D3	4614	D2	7015	A1
2320	B2	2720	C1	3306	B2	3624	D3	4620	D2	7301	B2
2321	B2	2721	C1	3307	B2	3625	D3	4621	C2	7303	B2
2322	B2	2723	C1	3308	B3	3630	D3	4630	C3	7306	B3
2323	B2	2724	C1	3310	B3	3634	D3	4631	D3	7308	B2
2324	B2	2725	C2	3311	B2	3637	D3	4634	C2	7309	B2
2325	B2	2726	C1	3314	B2	3651	C2	4635	C2	7310	B2
2328	B2	2728	D1	3315	B3	3652	C2	4650	D2	7311	A2
2329	B2	2730	C1	3316	B3	3653	C2	4651	C2	7312	B2
2330	B2	2731	C1	3319	B2	3654	C2	4652	C2	7320	B3
2331	B2	2747	C1	3320	B2	3655	D2	4676	C2	7322	A2
2333	B2	2748	C1	3321	B2	3656	D2	4677	D2	7324	B2
2334	B2	2755	C1	3322	B2	3658	D3	4680	D3	7407	A2
2338	B2	2756	C1	3323	B2	3660	D3	4681	D3	7411	A3
2359	A2	2758	D1	3324	A2	3662	D3	4703	C1	7651	D2
2360	A2	2759	D1	3325	B2	3673	C3	4707	D1	7652	C3
2361	A2	2760	D1	3326	B2	3680	D3	4708	D1	7656	D3
2362	A2	2761	D1	3327	A2	3684	C3	4709	D1	7661	D3
2366	A3	2762	D1	3328	B2	3685	C2	4710	D1	7701	C1
2369	B3	2763	D1	3330	B2	3686	C3	4711	C1	7702	C1
2370	B3	2764	D1	3331	B2	3687	C2	4724	D1	7708	D1
2371	A2	2766	C1	3332	B2	3688	C2	4725	D1	7713	D1
2372	A2	2770	C1	3333	B2	3689	C2	4728	D1	7716	C1
2373	A3	2786	D1	3334	B2	3690	C2	4735	D1		
2374	A2	2788	C1	3336	B2	3691	C2	4736	D1		
2375	A2	2792	D1	3337	B3	3696	D2	4790	D1		
2378	A2	2795	D2	3340	B2	3707	C1	5404	A2		
2384	A3	2900	C3	3341	B2	3708	C1	5406	A3		
2412	A2	2901	C3	3342	B2	3709	C1	5408	A2		
2413	A3	2902	C3	3343	B2	3710	C1	5409	B3		
2420	B3	2903	C3	3344	B2	3711	C1	5410	A2		
2502	C3	2904	C3	3345	B2	3712	C1	5651	D3		
2503	C2	2905	C3	3346	B3	3713	C1	5652	D3		
2504	C2	2906	B3	3347	B3	3718	C1	5701	D1		
2505	C2	2907	C3	3348	B3	3719	C1	5703	D1		
2551	C2	2908	C3	3349	B3	3720	C1	5704	C1		
2610	D2	2909	C3	3350	B3	3721	C1	5705	C1		
2611	D2	2910	C3	3361	B3	3722	C1	5706	C1		
2629	D2	2911	C3	3362	B2	3725	C1	5708	C1		
2632	D2	2912	C3	3363	B2	3730	C1	5709	C1		
2634	D2	2913	C3	3364	B2	3731	C1	5710	C1		

Layout SSB (Part 1 Tuner Side)

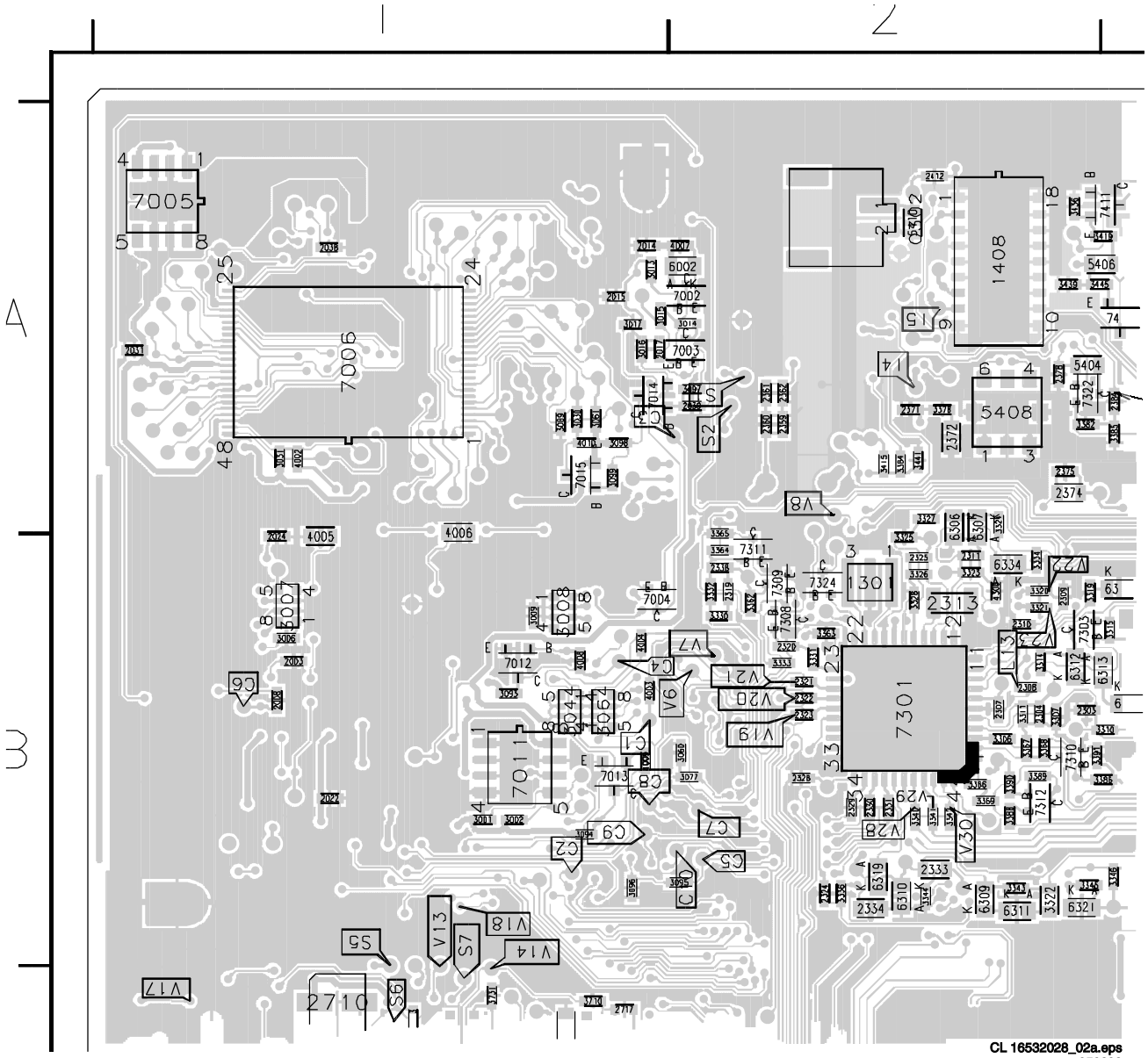

Layout SSB (Part 2 Tuner Side)

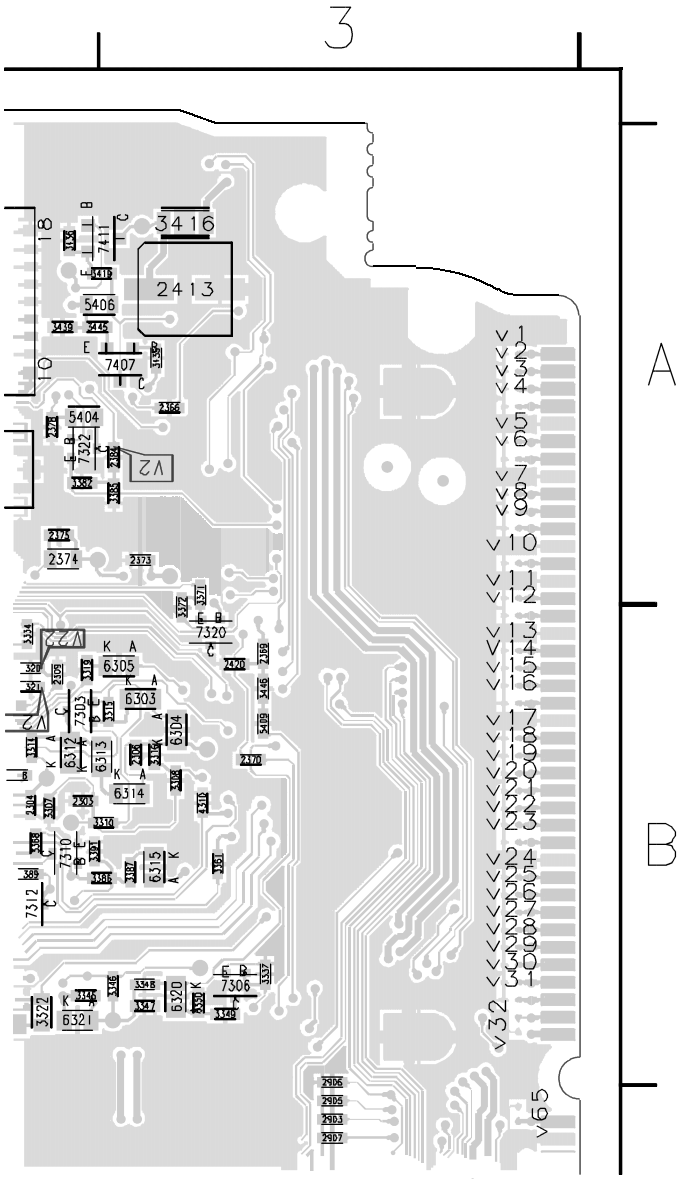

Layout SSB (Part 4 Tuner Side)

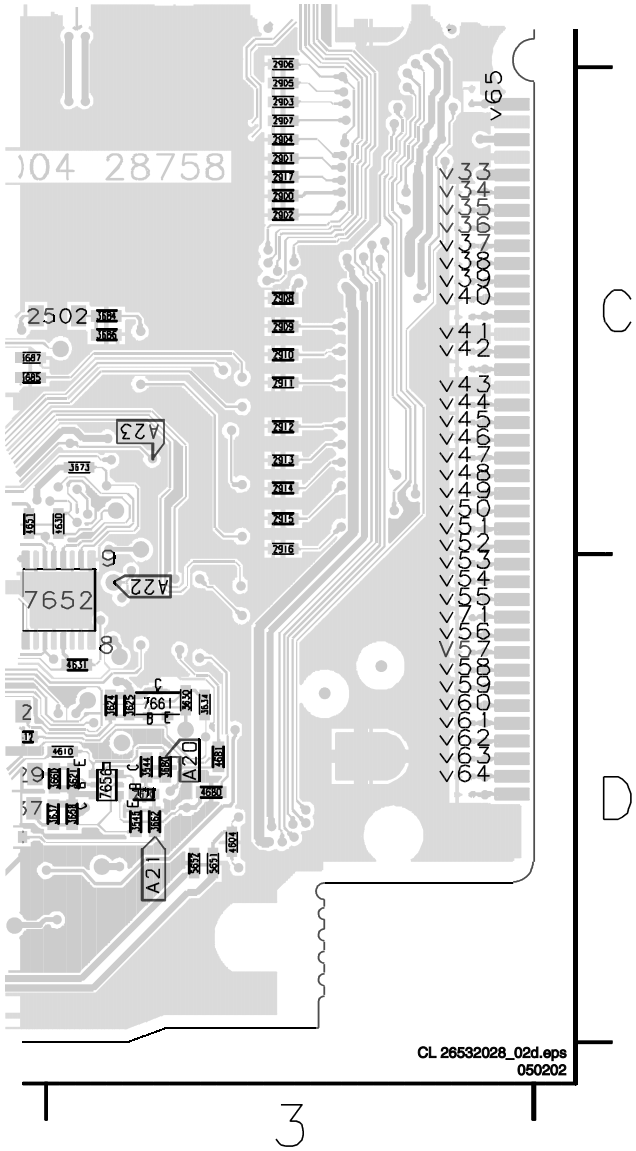

Layout SSB (Part 3 Tuner Side)

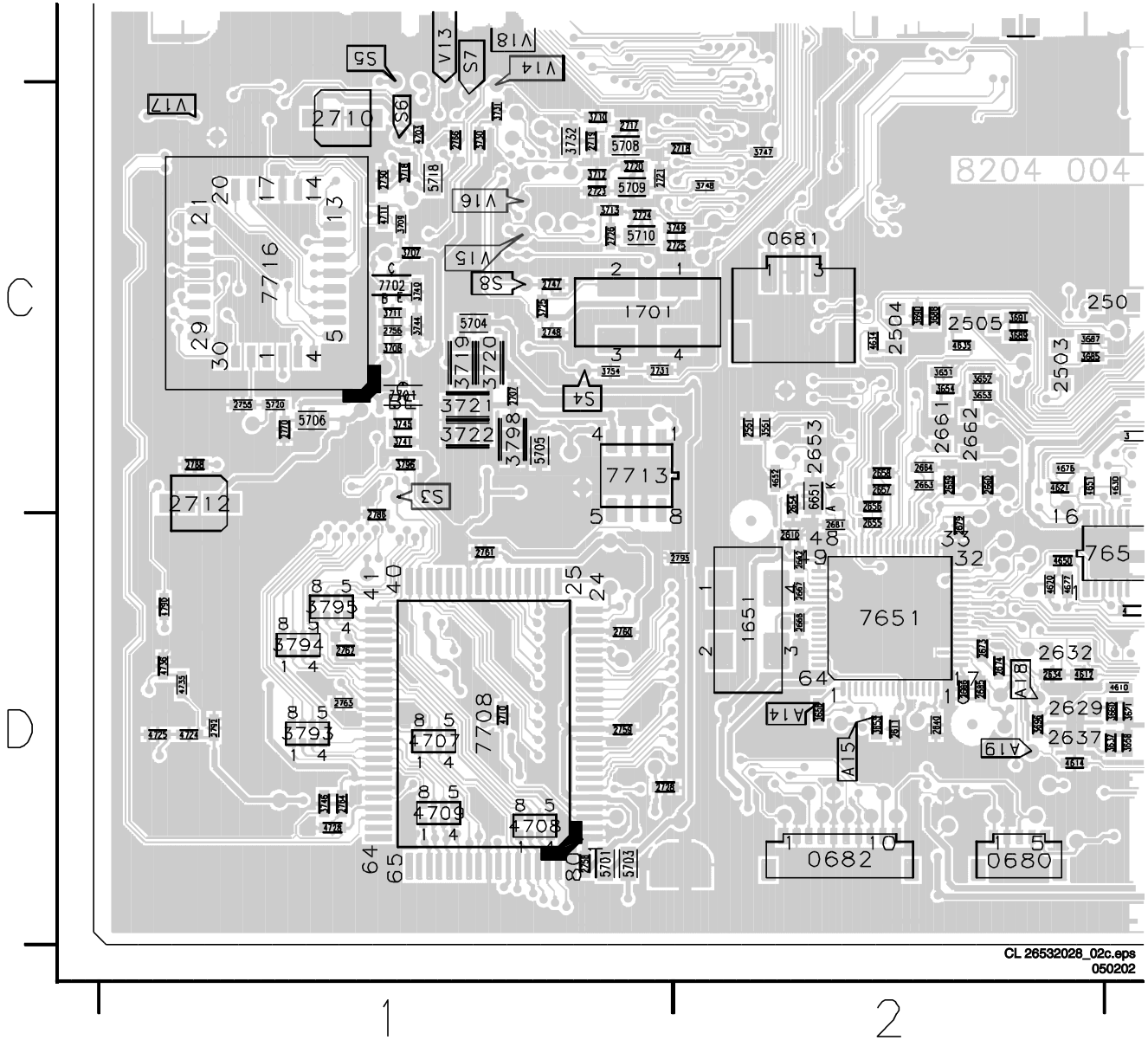

CL 26532028_02c.eps
050202

DC-Shift + Anti Moiré

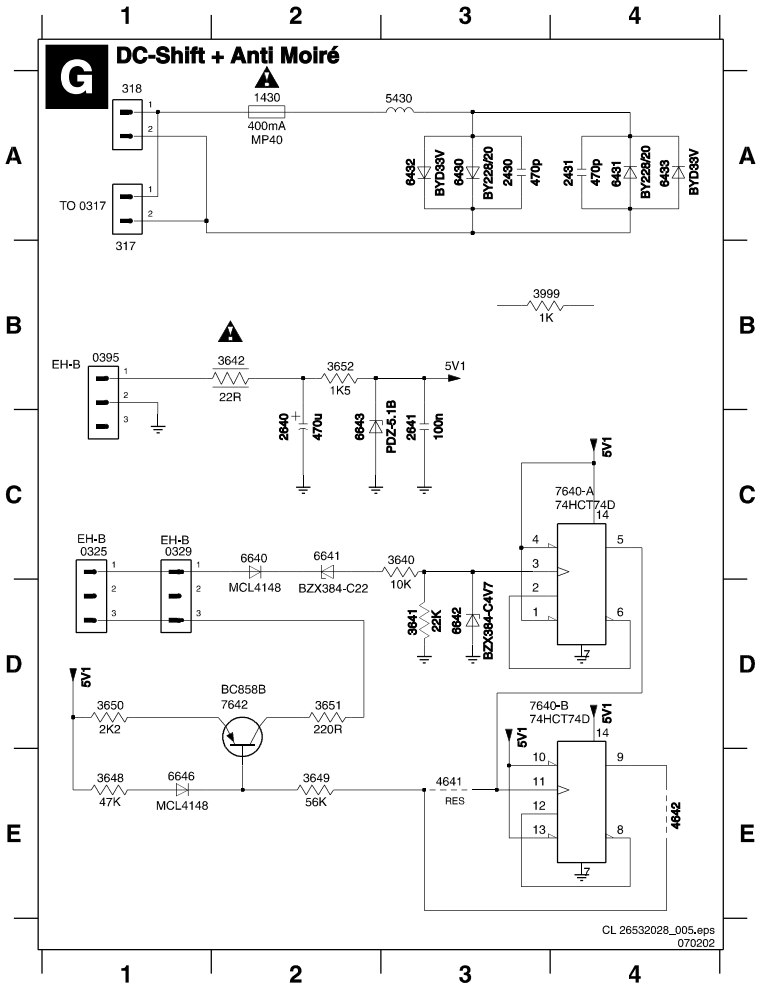

317 B1
318 A1
0325 C1
0329 C1
0395 B1
1430 A2
2430 A3
2431 A4
2640 C2
2641 C3
3640 C3
3641 D3
3642 B2
3648 E1
3649 E2
3650 D1
3651 D2
3652 B2
3999 B3
4641 E3
4642 E4
5430 A3
6430 A3
6431 A4
6432 A3
6433 A4
6640 C2
6641 C2
6642 D3
6643 C2
6646 E1
7640-A C4
7640-B D3
7642 D2

Layout DC-Shift + Anti Moiré

0317 A3 0329 A1 2430 A2 3642 A1 6431 A3
0318 A2 0395 A1 2431 A3 5430 A3 6432 A3
0325 A1 1430 A3 2640 A1 6430 A2 6433 A3

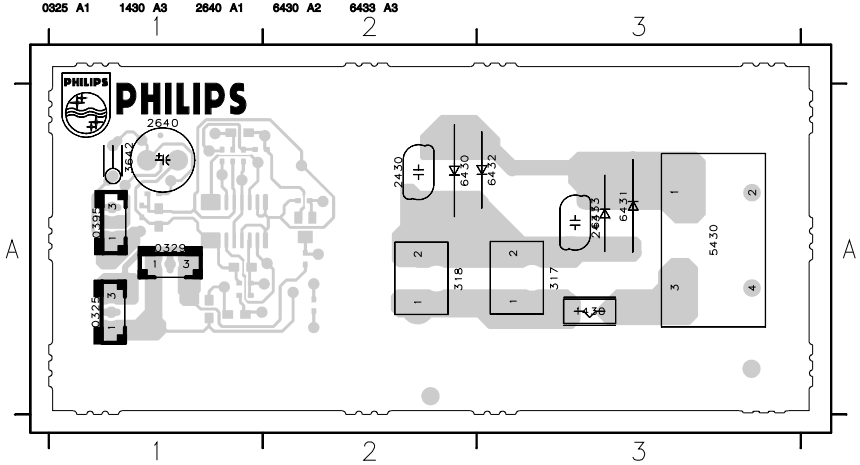

0317 A1 0329 A3 2430 A2 2641 A3 3642 A3 3650 A2 3999 A2 5430 A1 6432 A1 6641 A3 6646 A3
0318 A2 0395 A3 2431 A1 3640 A3 3648 A3 3651 A2 4641 A3 6430 A2 6433 A1 6642 A3 7640 A3
0325 A3 1430 A1 2640 A3 3641 A3 3649 A3 3652 A3 4642 A3 6431 A1 6640 A3 6643 A3 7642 A2

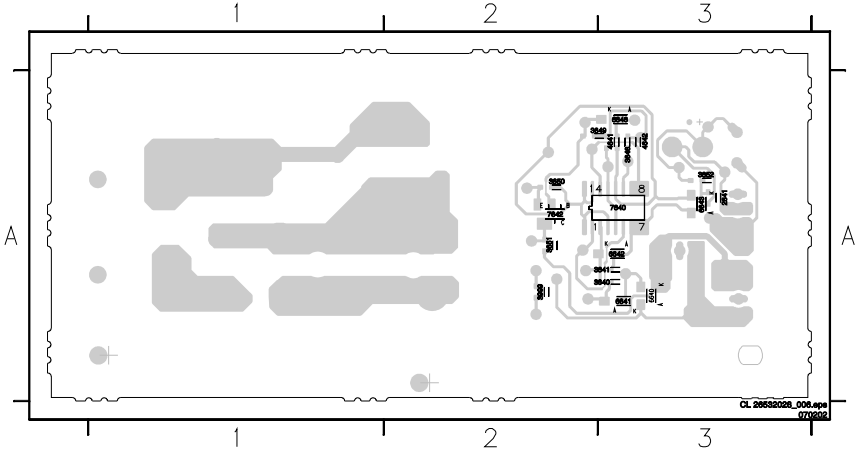

Personal Notes:

Personal Notes:

EM2E
AA 02.02

Service
Service
Service

Service Information

New Side I/O, Top Control and Mains Switch Panel

In week 225 the following panels are introduced in the set 29PT8607:

- Mains Switch Panel **[K]**
- Side I/O Panel **[L]**
- Top Control Panel **[M]**

In this service information the (changed) schematics, PCB layouts and spare parts list are given. To use the existing Block diagrams, wiring diagrams, I^2C overviews, supply line overview and chassis overview the schematics character **[E]** has to be replaced by **[K]**, **[O]** by **[L]** and **[P]** by **[M]**.

Neues Side I/O, Top Control und Mains Switch Panel

In der Woche 225 wurden folgende neue Platinen zusammen mit dem Modell 29PT8607 introduziert:

- Netzschalterplatine (Main-Switch-Panel) **[K]**
- Seitliche E/A-Platine (Side I/O-Panel) **[L]**
- Lokale Ortsbedienung (Top Control Panel) **[M]**

Mit dieser Serviceinformation werden die (änderten) zugehörigen Schaltbilder, das Platinenlayout und die Ersatzteil-Stücklisten veröffentlicht. Um die bereits bestehenden Block- und Verkabelungsdiagramme, die I^2C-Bus-Übersicht sowie die Übersichten der Spannungsversorgungsleitungen bzw. der Chassisausführungen weiter nutzen zu können müssen folgenden Einzelschaltbilder ersetzt werden: Diagramm **[E]** durch Diagramm **[K]**, **[O]** durch **[L]** und Diagramm **[P]** durch **[M]**.

Nouvelles platines E/S, Commande supérieure, Platine Commutateur Secteur.

Depuis la semaine 225 les platines suivantes sont introduites dans l'appareil 29PT8607:

- Platine commutateur secteur **[K]**
- Platine E/S de coté **[L]**
- Platine de Commandes en partie supérieure **[M]**

Cette information service done les schémas, implantations et liste des pièces correspondant. Pour utiliser les schémas bloc, de cablage, I^2C, alimentation et vue d'ensemble du châssis les repères de schéma **[E]** doivent être remplacés par **[K]**, **[O]** par **[L]** et **[P]** par **[M]**.

©Copyright 2002 Philips Consumer Electronics B.V. Eindhoven, The Netherlands. All rights reserved. No part of this publication may be reproduced, stored in a retrieval system or transmitted, in any form or by any means, electronic, mechanical, photocopying, or otherwise without the prior permission of Philips.

Published by RB 0266 Service PaCE Printed in the Netherlands Subject to modification 3122 785 40640

PHILIPS

Spare parts list

Mains Switch Panel [K]

Various

0157▲	3104 311 02421	Cable 5p 480mm
0177▲	3104 311 03011	Cable 2p 340mm
0201	2422 025 16268	2p male
0202	2422 025 16268	2p male
0203	2422 025 06353	5p male
1910	9322 127 54667	IR receiver TSOP1836UH1
1951	2422 128 02972	Power switch

⊣⊢

2930	4822 124 41584	100µF 20% 10V
2931	4822 124 41796	22µF 20% 16V
2932	4822 124 11913	22nF 20% 275V

⊟

3957	4822 053 21335	3.3MΩ 5% 0.5W
3966	4822 053 21335	3.3MΩ 5% 0.5W
3978	4822 051 30101	100Ω 5% 62mW
3981	4822 051 30392	3kΩ9 5% 63mW
3982	4822 116 52219	330Ω 5% 0.5W
3985	4822 117 13632	100kΩ 1% 620mW
3986	4822 051 30221	220Ω 5% 62mW
3988	4822 051 30479	47Ω 5% 62mW
3989	4822 051 30102	1kΩ 5% 62mW
3990	4822 117 13632	100kΩ 1% 620mW
3991	4822 050 11002	1kΩ 1% 0.4W

⊢▶

6901	9322 050 99682	LTL-10224WHCR
6954	4822 130 30621	1N4148

7900	3198 010 42320	BC857BW
7901	3198 010 42310	BC847BW
7902	4822 130 11418	TCDT1102G

Side I/O panel [L]

Various

0240	2422 025 12485	Conn 11P
1254	4822 267 31014	Headphone socket
1255	4822 265 11606	Conn 3P

⊣⊢

2286	4822 122 33642	150pF 5% 50V
2288	4822 122 33642	150pF 5% 50V
2292	5322 122 32311	470pF 10% 100V
2294	5322 122 32311	470pF 10% 100V
2296	4822 122 30043	10nF 80% 63V
2297	4822 122 30043	10nF 80% 63V

⊟

3285	4822 116 52201	75Ω 5% 0.5W
3286	4822 116 52176	10Ω 5% 0.5W
3287	4822 116 52201	75Ω 5% 0.5W
3288	4822 116 52176	10Ω 5% 0.5W
3289	4822 116 52249	1k8 5% 0.5W
3291	4822 050 11002	1k 1% 0.4W
3292	4822 117 10834	47k 1% 0.1W
3293	4822 050 11002	1k 1% 0.4W
3294	4822 117 10834	47k 1% 0.1W
3295	4822 116 52276	3k9 5% 0.5W
3296	4822 117 10833	10k 1% 0.1W
3297	4822 117 10833	10k 1% 0.1W

⊢▶

6291	9340 548 61115	PDZ12B
6292	9340 548 61115	PDZ12B
6293	9340 548 61115	PDZ12B
6294	9340 548 61115	PDZ12B

Top Control Panel [M]

Various

0215	4822 267 10748	3P
1091	4822 276 13775	Switch
1092	4822 276 13775	Switch
1093	4822 276 13775	Switch
1094	4822 276 13775	Switch

⊟

3091	4822 051 20561	560Ω 5% 0.1W
3092	4822 051 20391	390Ω 5% 0.1W
3093	4822 051 20561	560Ω 5% 0.1W
3094	4822 117 11504	270Ω 1% 0.1W
3095	4822 051 20332	3k3 5% 0.1W
3096	4822 117 11139	1k5 1% 0.1W

⊢▶

6091	4822 130 31983	BAT85
8345	4822 320 12511	3P 1500mm

Electrical Diagrams and PWB's

Large Signal Panel: Main Supply

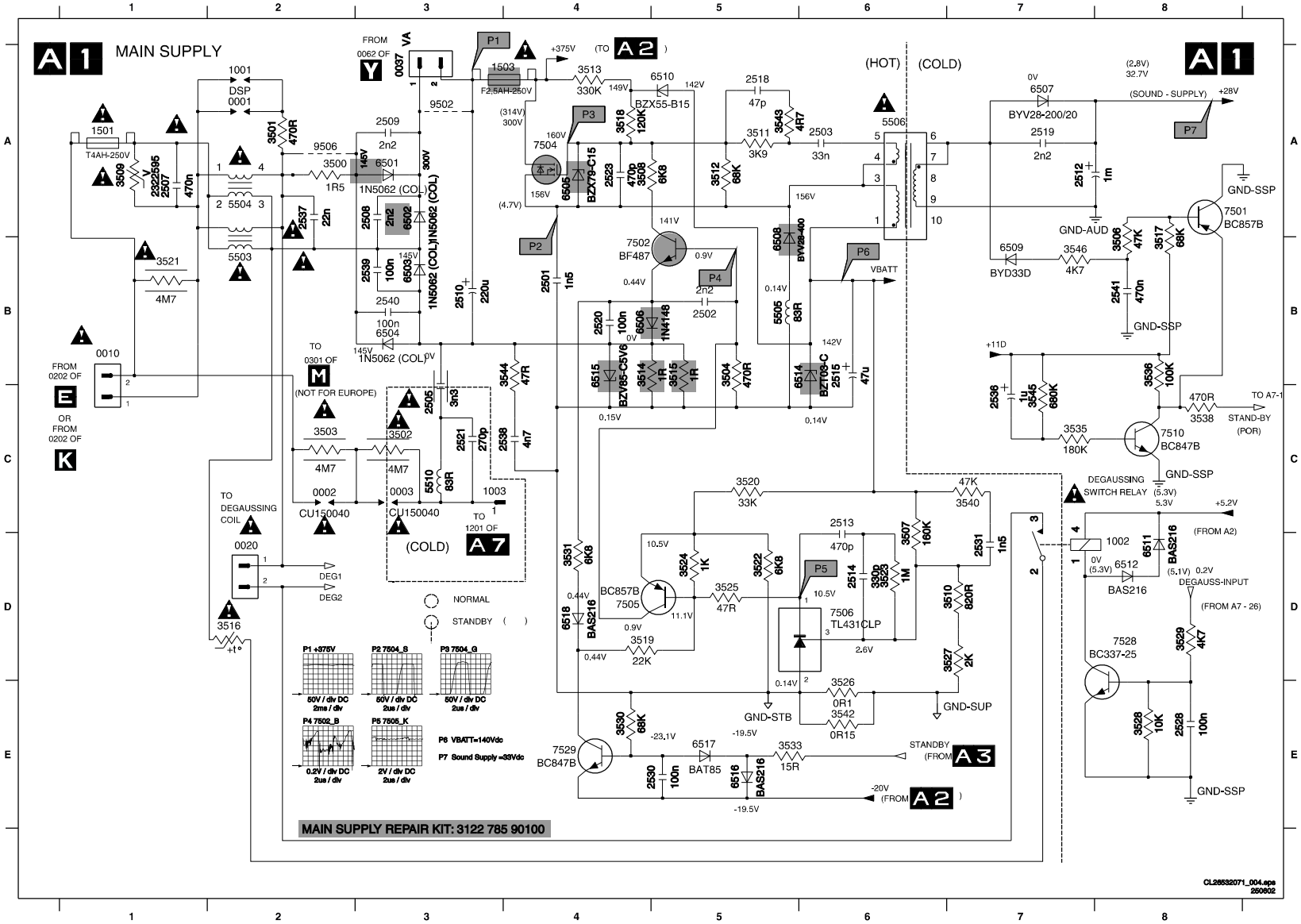

0001 A2
0002 C2
0003 C3
0010 B1
0020 D2
0037 A3
1001 A2
1002 D8
1003 C4
1501 A1
1503 A3
2501 B4
2502 B5
2503 A6
2505 C3
2507 A1
2508 A3
2509 A3
2510 B3
2512 A7
2513 C6
2514 D6
2515 B6
2518 A5
2519 A7
2520 B4
2521 C3
2523 A4
2528 E8
2530 E5
2531 D7
2536 C7
2537 A2
2538 C4
2539 B3
2540 B3
2541 B8
3500 A2
3501 A2
3502 C3
3503 C2
3504 B5
3506 B8
3507 D6
3508 A4
3509 A1
3510 D7
3511 A5
3512 A5
3513 A4
3514 B4
3515 B5
3516 D2
3517 B8
3518 A4
3519 D4
3520 C5
3521 B1
3522 D5
3523 D6
3524 D5
3525 D5
3526 E6
3527 D7
3528 E8
3529 D8
3530 E4
3531 D4
3533 E5
3535 C7
3536 B8
3538 C8
3540 C7
3542 E6
3543 A5
3544 B4
3545 C7
3546 B7
5503 B2
5504 A2
5505 B5
5506 A6
5510 C3
6501 A3
6502 A3
6503 B3
6504 B3
6505 A4
6506 B4
6507 A7
6508 B5
6509 B7
6510 A5
6511 D8
6512 D8
6514 B6
6515 B4
6516 E5
6517 E5
6518 D4
7501 A8
7502 B4
7504 A4
7505 D4
7506 D6
7510 C8
7528 D8
7529 E4
9502 A3
9506 A2

Large Signal Panel: Tuner, I/O, SIMM Connector (Female)

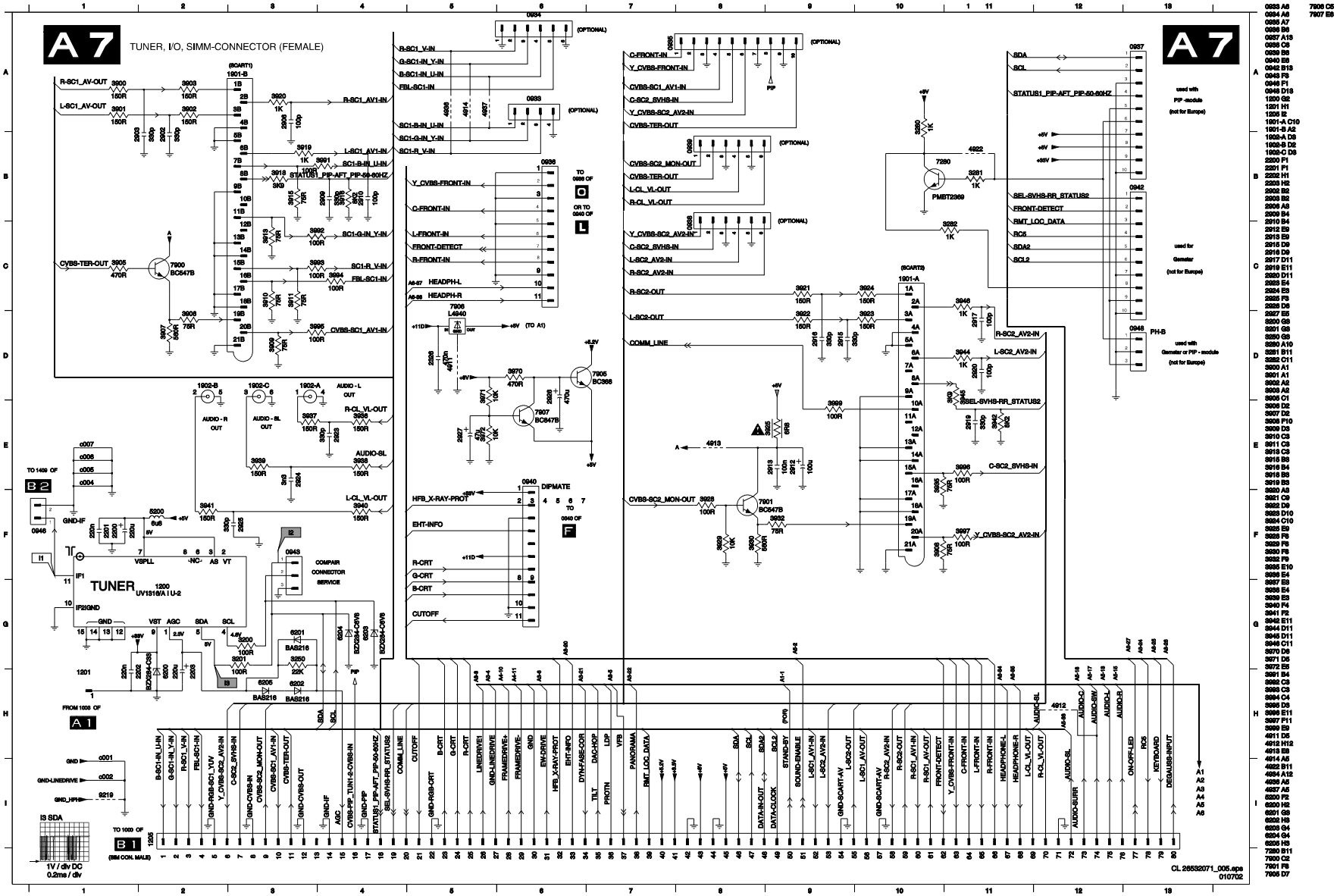

Large Signal Panel: Front

0945 C2
0947 A1
3237 B1
3998 B1

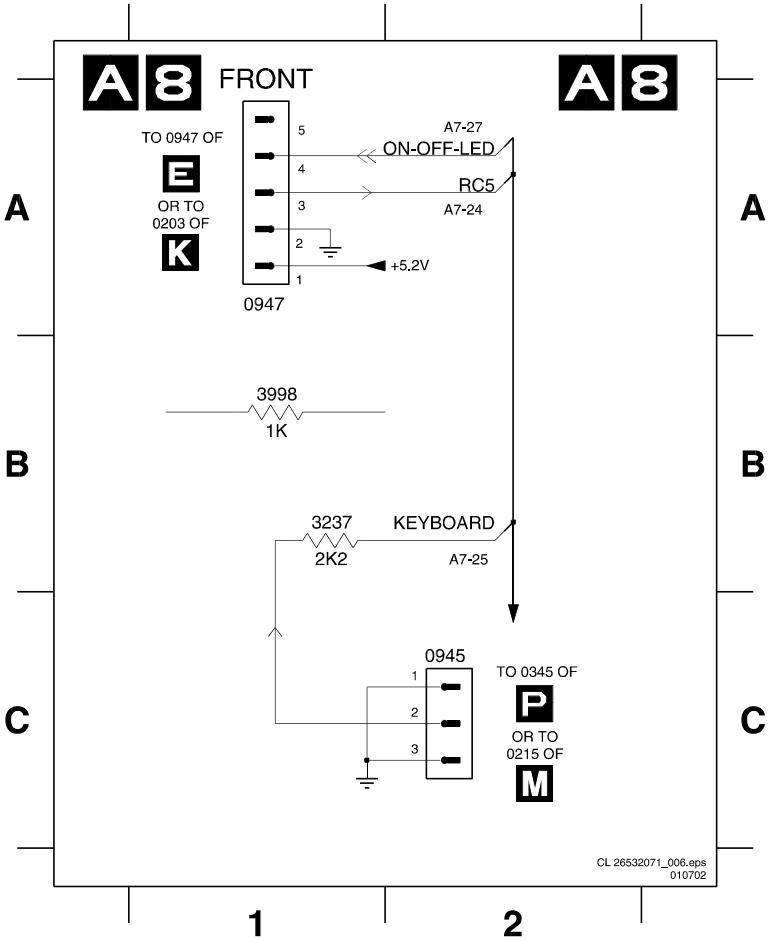

Mains Switch Panel

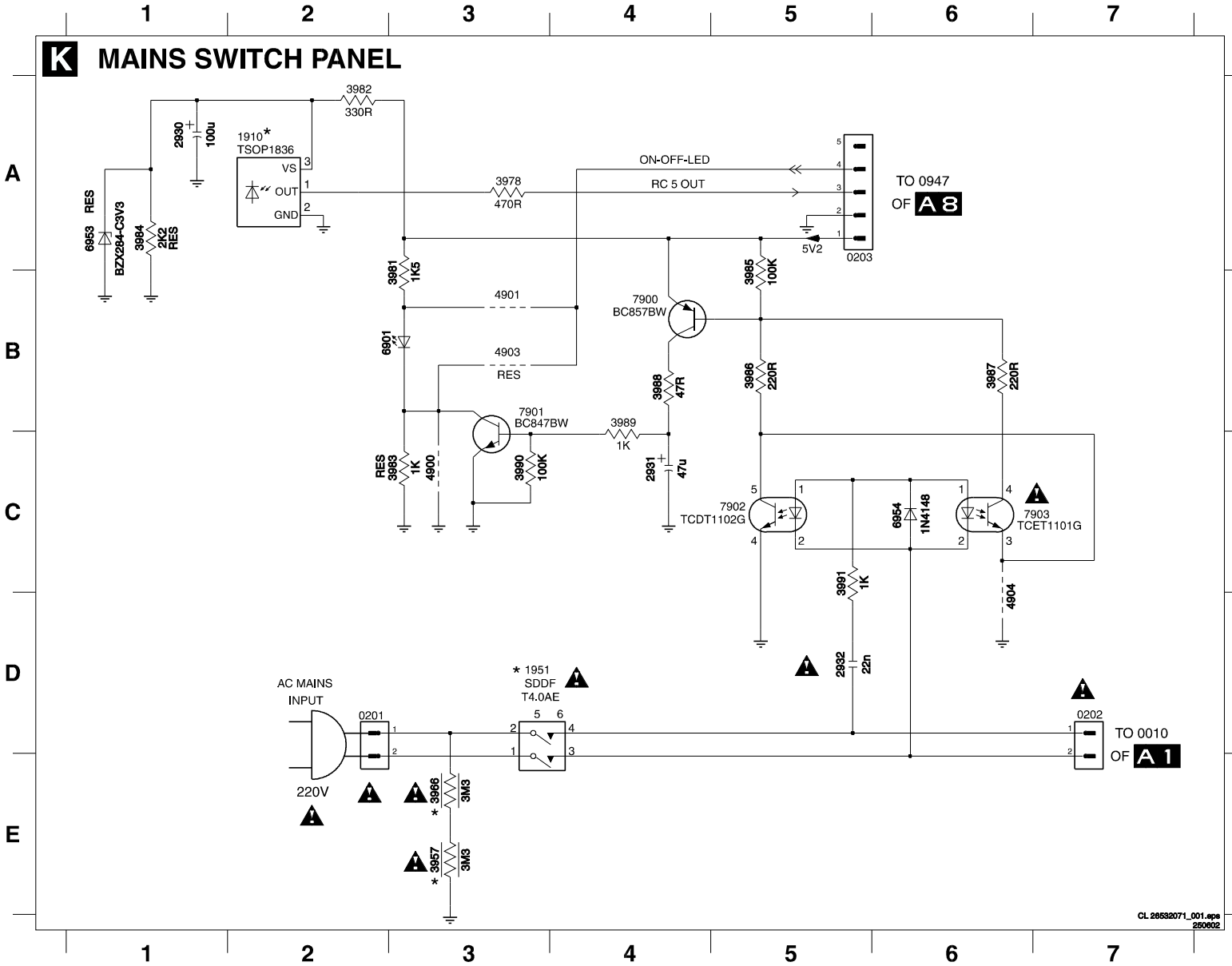

0201 D2
0202 D7
0203 A5
1910 A2
1951 D3
2930 A1
2931 C4
2932 D5
3957 E3
3966 E3
3978 A3
3981 B3
3982 A2
3983 C3
3984 A1
3985 B5
3986 B5
3987 B6
3988 B4
3989 B4
3990 C3
3991 C5
4900 C3
4901 B3
4903 B3
4904 D6
6901 B3
6953 A1
6954 C6
7900 B4
7901 B3
7902 C5
7903 C6
F903 D3
F904 D6
F905 D3
F906 D6
F907 A5
F908 A5
F909 A5
F910 C2
I901 A1
I902 B3
I903 A2
I904 B2
I905 E3
I906 B5
I907 B4
I908 B5
I909 C6
I910 C4
I911 C4
I912 C6
I913 A5
I914 D5
I915 E3

Layout Mains Switch Panel (Top Side)

0201 B1	0203 A2	1951 C2	2931 A3	3957 B2	3982 A3	6901 B3	7902 A3
0202 A1	1910 A3	2930 A3	2932 A1	3966 B2	3991 A2	6954 A2	7903 A3

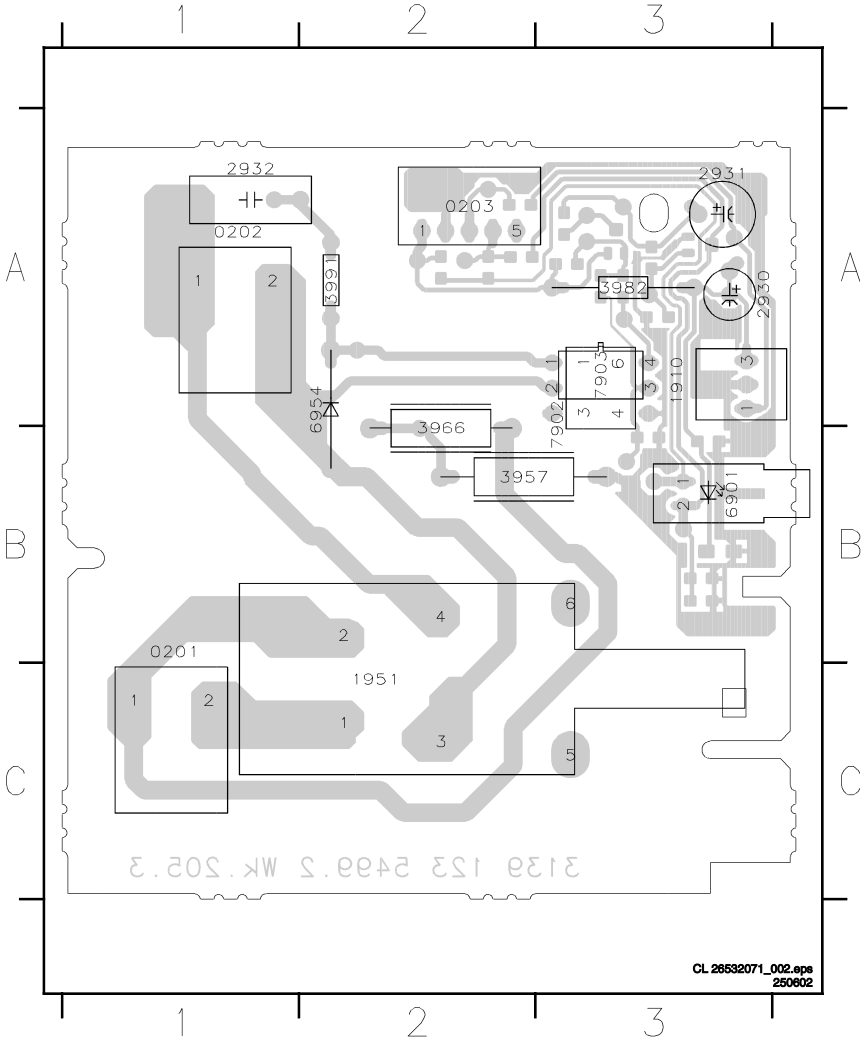

Layout Mains Switch Panel (Bottom Side)

3978 A2	3964 B1	3987 A1	3990 A1	4903 A2	7900 A1
3981 A2	3985 A1	3988 A1	4900 B1	4904 B1	7901 A1
3983 B1	3986 A1	3989 A1	4901 A2	6953 B1	

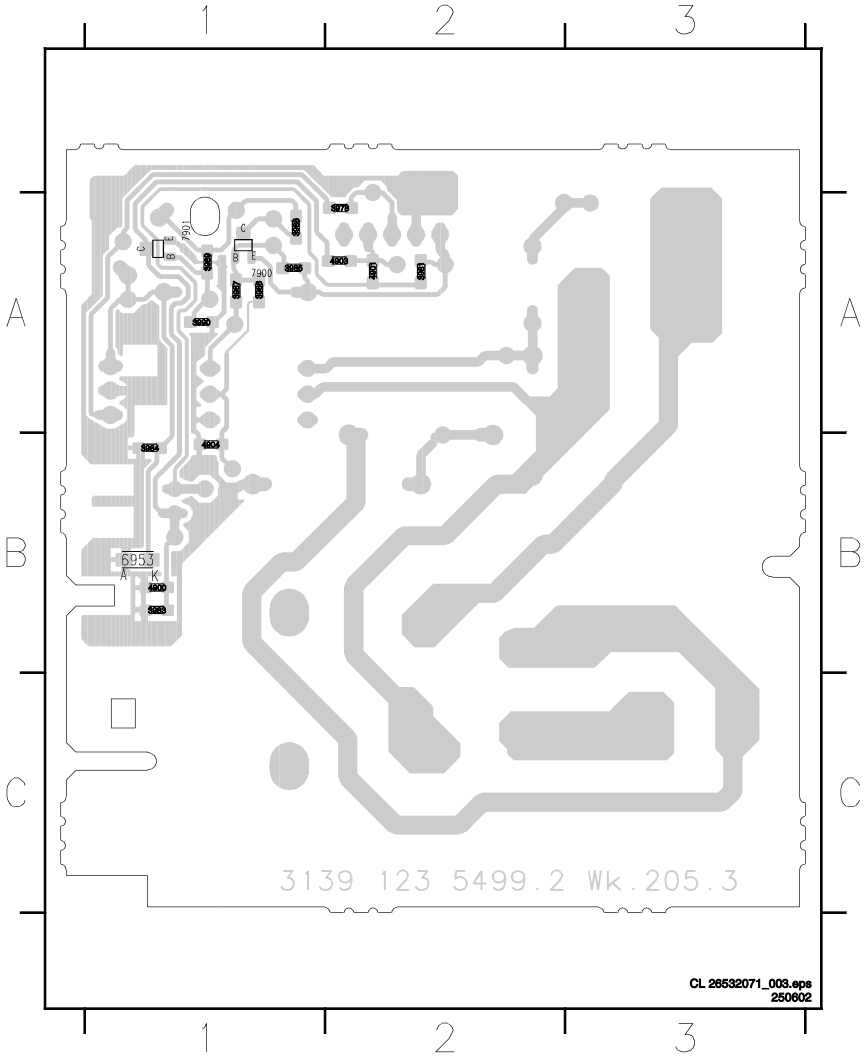

Side I/O Panel

L SIDE IO PANEL

0240 A4	1256-B A1	2297 E3	3291 B2	3297 E3	6294 E2	SG06 E1
1254 D1	2286 A3	3285 A3	3292 B2	4201 A1	SG01 B2	SG07 E1
1255-A D1	2288 A3	3286 A3	3293 C2	4202 A1	SG02 A2	SG08 B1
1255-B C1	2292 B3	3287 A3	3294 C3	6291 E2	SG03 C1	
1255-C B1	2294 C3	3288 A3	3295 D3	6292 E2	SG04 D1	
1256-A A1	2296 E2	3289 B2	3296 E2	6293 E2	SG05 D1	

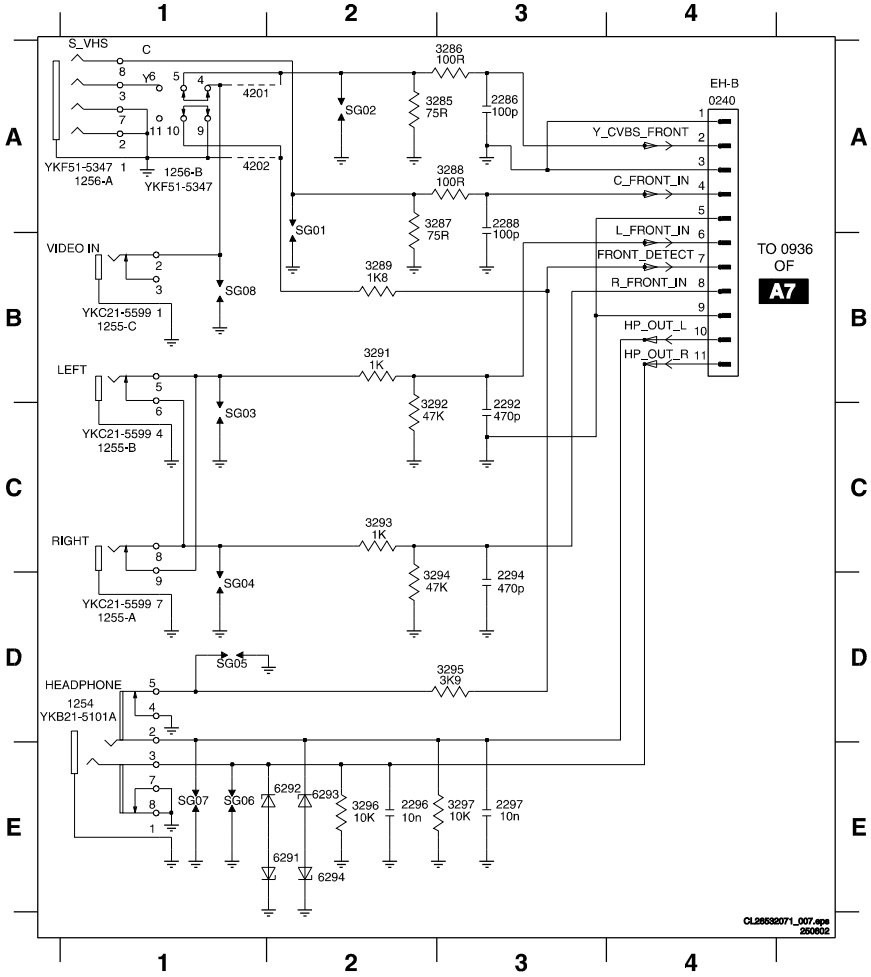

Personal Notes:

Layout Side I/O Panel (Top Side)

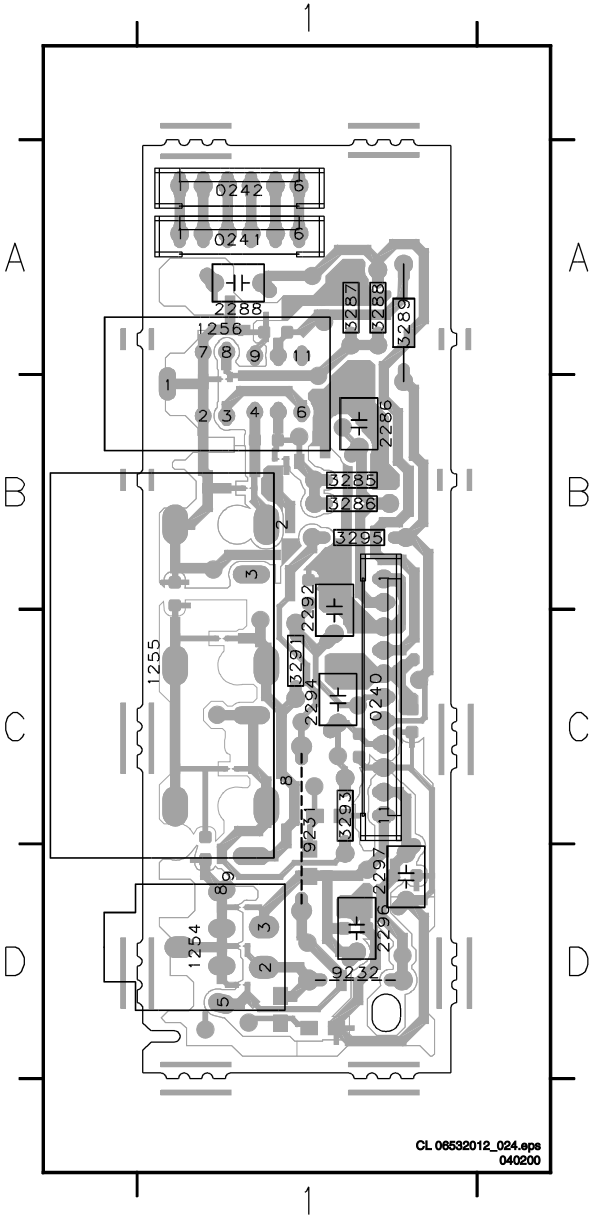

0240 C1
0241 A1
0242 A1
1254 D1
1255 C1
1256 A1
2286 B1
2288 A1
2292 B1
2294 C1
2296 D1
2297 D1
3285 B1
3286 B1
3287 A1
3288 A1
3289 A1
3291 C1
3293 C1
3295 B1
9231 C1
9232 D1

Layout Side I/O Panel (Bottom Side)

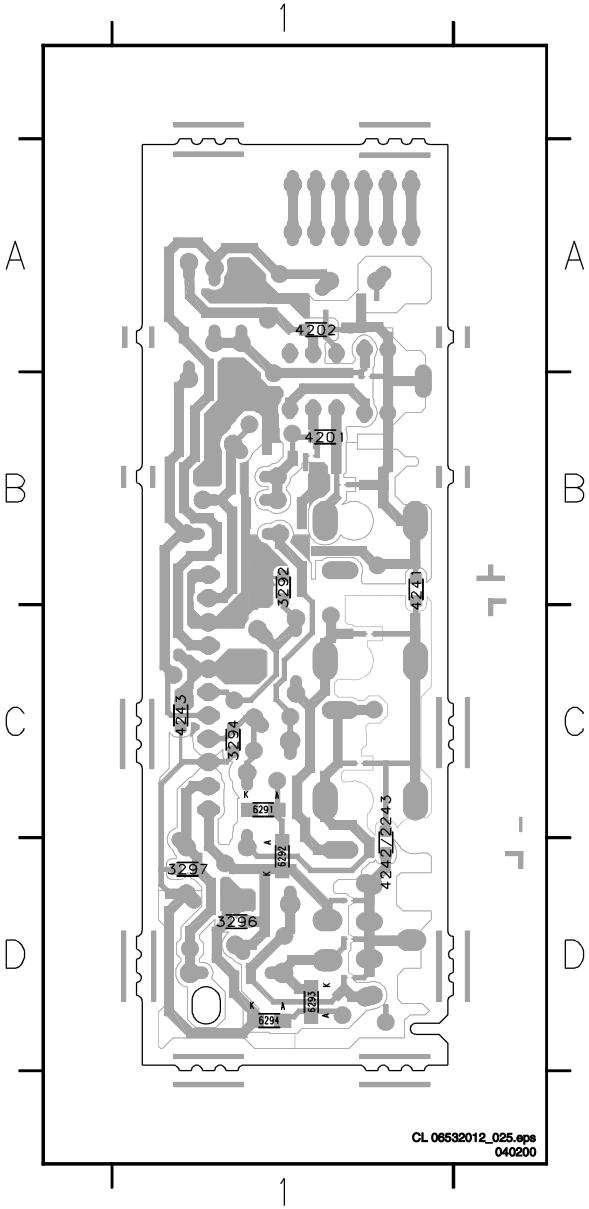

3292 B1
3294 C1
3296 D1
3297 D1
4201 B1
4202 A1
4241 B1
4242/2243 D1
4243 C1
6291 C1
6292 D1
6293 D1
6294 D1

Top Control Panel

0215 A1	1093 B4	2010 B1	3088 C3	3091 A2	3094 B3	3097 C3	4090 C2	4093 A3	6092 B4
1091 B2	1094 C4	3086 A4	3089 C3	3092 A2	3095 B4	3098 C3	4091 A2	4094 A3	6093 C4
1092 B3	1095 B4	3087 C4	3090 C2	3093 A3	3096 C4	4089 C3	4092 A2	6091 B4	

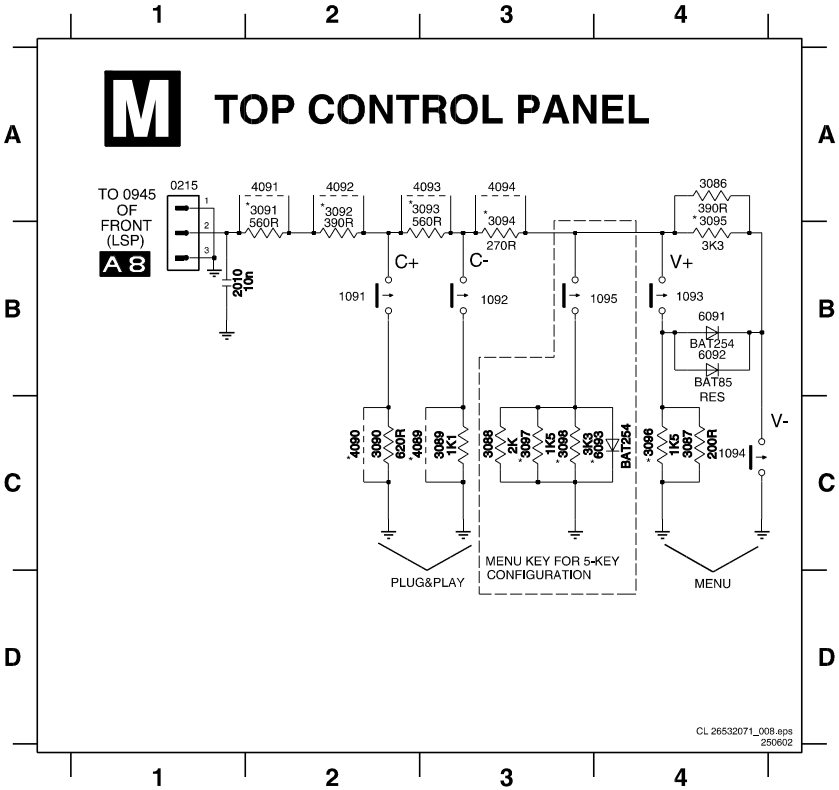

Layout Top Control Panel

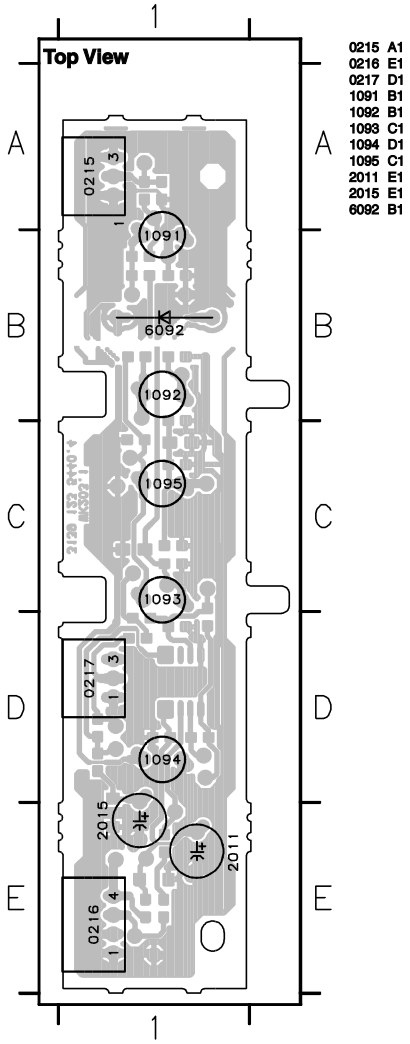

0215 A1
0216 E1
0217 D1
1091 B1
1092 B1
1093 C1
1094 D1
1095 C1
2011 E1
2015 E1
6092 B1

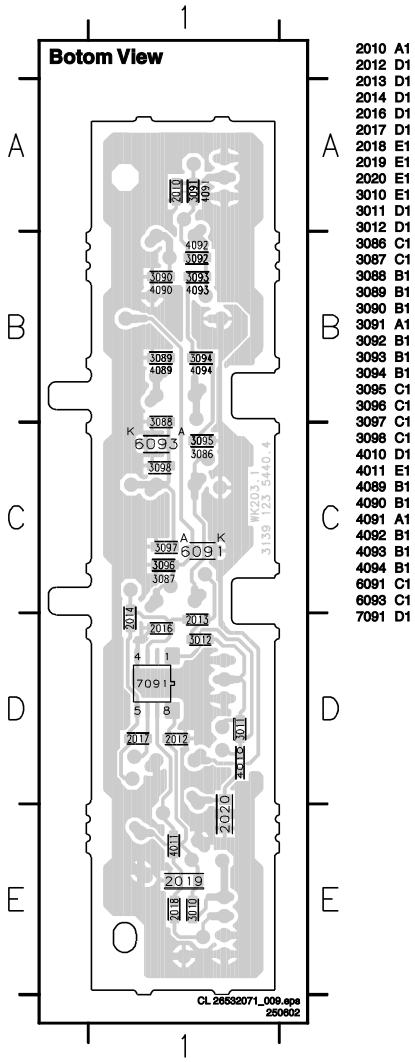

2010 A1
2012 D1
2013 D1
2014 D1
2016 D1
2017 D1
2018 E1
2019 E1
2020 E1
3010 E1
3011 D1
3012 D1
3086 C1
3087 C1
3088 B1
3089 B1
3090 B1
3091 A1
3092 B1
3093 B1
3094 B1
3095 C1
3096 C1
3097 C1
3098 C1
4010 D1
4011 E1
4089 B1
4090 B1
4091 A1
4092 B1
4093 B1
4094 B1
6091 C1
6093 C1
7091 D1